RADIO

ELECTRONIC FRAUD

FIRST EDITION $1.00

1965

RADIO DESIGN PRACTICE

FIRST EDITION

AN IDEA BOOK FOR ENGINEERS, EXPERIMENTERS, AND DESIGNERS OF RADIO AND ASSOCIATED EQUIPMENT

Edited by

James Millen

with drawings by

M. B. Sleeper

PUBLIC LIBRARY
ST
NO

PRICE ONE DOLLAR

Copyright, 1935

X614866

Published by

JAMES MILLEN, Inc.

MALDEN, MASS.

IMPORTANT NOTICE TO READERS

As far as possible, all drawings in Radio Design Practice have been made one-half size. These drawings were made from the actual parts themselves, and every care has been taken to assure their accuracy in order that dimensions not given can be scaled off.

Unless notice is given to the contrary, therefore, it is to be assumed that the drawings are one-half actual size.

Mc C
1.00-10%.

Ref. 621.38

The material presented in this first edition of Radio Design Practice has been collected through the courtesy and with the cooperation of radio concerns which have established and maintained designs and methods over such a period of time that their persistence, which is the essence of standardization, constitutes a working basis for designers of radio equipment, and for engineers and experimenters who are carrying forward the march of scientific progress.

To broaden the scope and usefulness of this book, special examples of apparatus design are illustrated, equipment presenting original and outstanding features, so that Radio Design Practice can be useful as a reference handbook of ideas and suggestions.

It should be pointed out that the inclusion or omission of data on apparatus and equipment, or the amount of space devoted to the products shown, do not constitute the unexpressed opinions of the editor. This is a matter which has been dictated, rather, by the information made available, and by the policies of the various manufacturers. It is hoped that many concerns whose products are not shown in this first edition will be represented subsequently. This applies particularly to the RCA group, whose legal department at the last moment withdrew permission to publish material on their products.

While we have been assisted generously by engineers of many different companies, so that the material represents a cross-section of well-informed opinion, it is certain that there will be criticism of material presented or omitted.

Such criticism will be welcomed most heartily, and will be given thorough consideration in planning the second edition, in which an increased number of pages will permit the incorporation of suggestions from the readers of the first edition.

It is our intention to establish Radio Design Practice as a standard engineering handbook, expanding its scope of usefulness by succeeding revised and enlarged editions. We wish to take this opportunity to express our gratitude to the concerns who have provided the photographs and information presented here, and particularly to J. Louis Reynolds, of the A. T. & T. Company, who has contributed much time and thought to the problems of selecting suitable data, to Harry E. Young of the Western Electric Company, to E. H. Fritschel of the General Electric Company, to Harold B. Richmond of the General Radio Company, to C. J. Burnside of the Westinghouse Elec. & Mfg. Co., to Stanley Abbott of the Hygrade Sylvania Co., to Ezra Stevens of the Raytheon Company, and to M. B. Sleeper, formerly of the Western Electric Company, who not only designed the front cover but also made the many line drawings for the National Company, which that company contributed for use in the Manual. To Milton Sleeper is also due credit for collecting and arranging the Western Electric material.

JAMES MILLEN

Malden, Massachusetts
February 1, 1935

SPIRAL BINDING COMPANY–B

U. S. Patent Nos. 1516932–1942026–1985776

Other Patents Pending

PRINTED
IN
U.S.A.

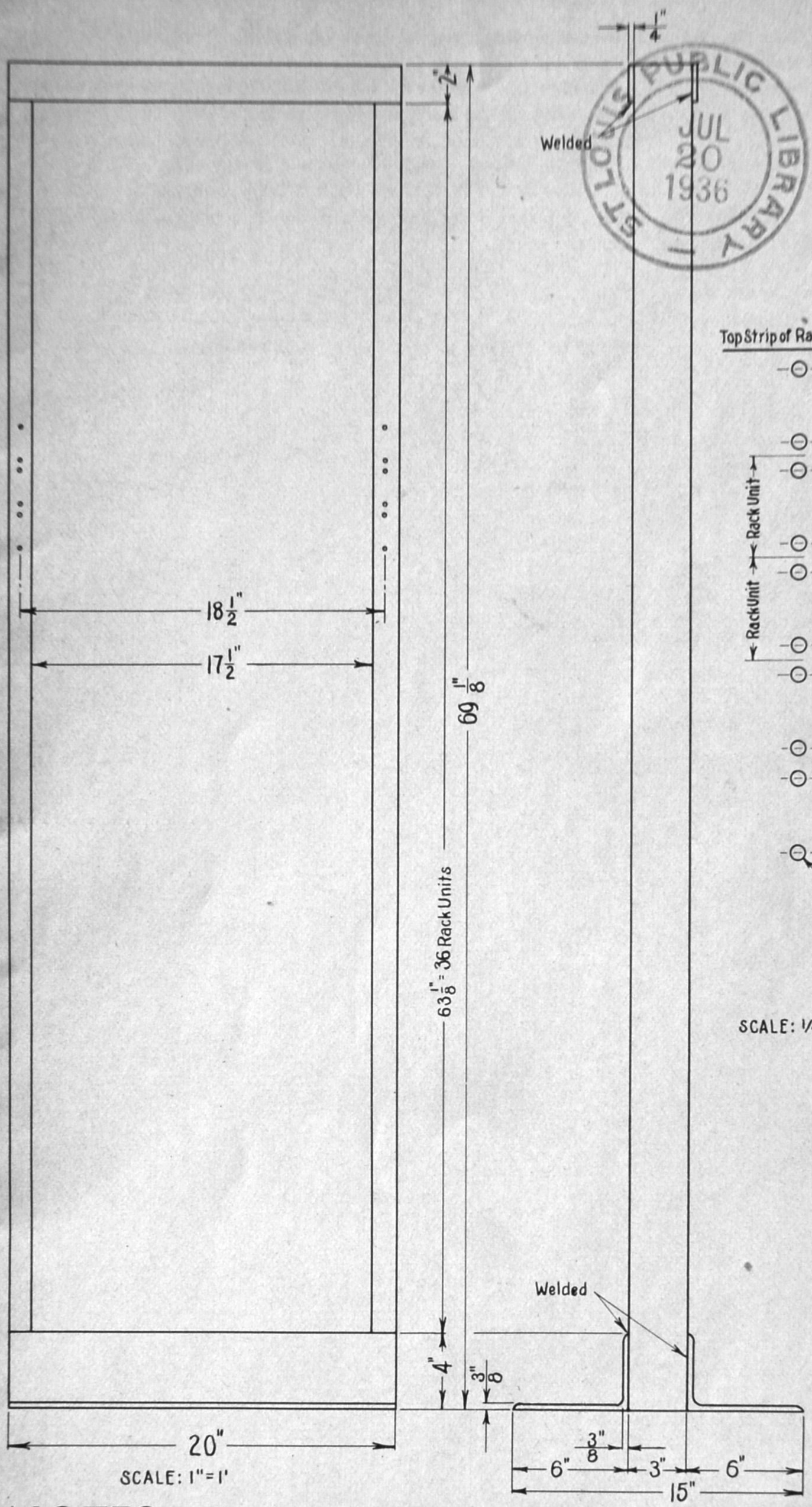

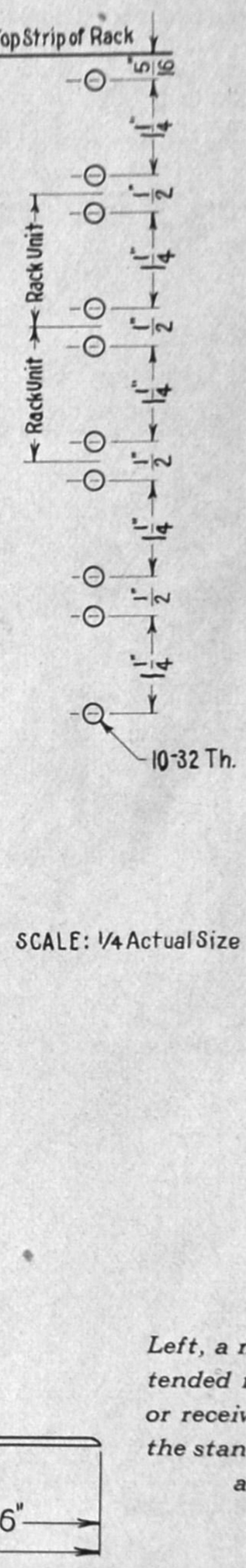

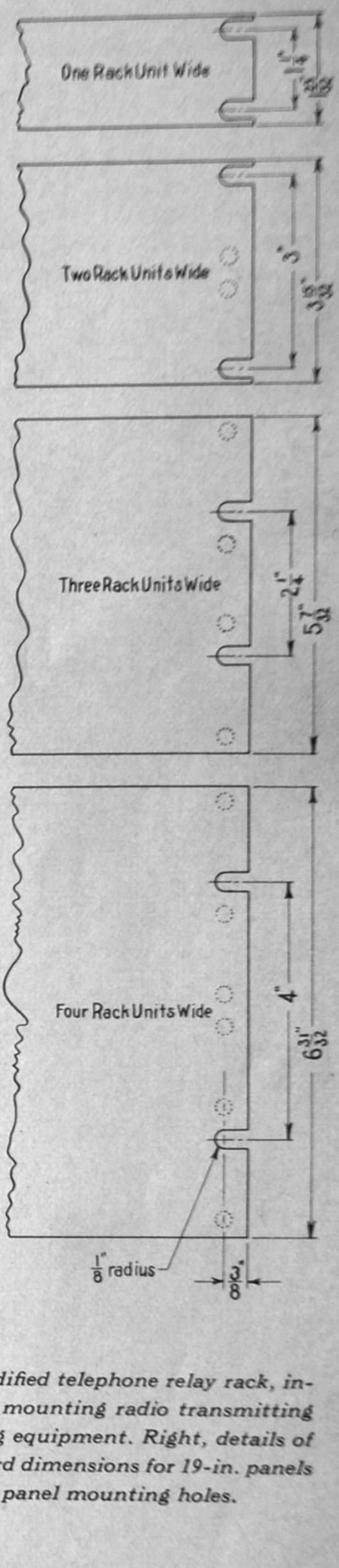

Left, a modified telephone relay rack, intended for mounting radio transmitting or receiving equipment. Right, details of the standard dimensions for 19-in. panels and panel mounting holes.

NOTES

Rack and panel construction for radio equipment is a practice borrowed from long-established telephone practice. It offers many mechanical advantages, facilitates service and inspection, and lends itself to the increasing association of radio apparatus with telephone equipment.

The following pages illustrate one type of 3-in. channel rack which is available through radio supply houses, a small table rack, and two adaptations of the standard telephone rack which contribute greatly toward making radio installations attractive in appearance.

There is a noticeable trend in amateur as well as in broadcast and communications installations to eliminate the hay-wire impression which has characterized radio equipment in the past. This newer atmosphere not only contributes directly to the efficiency of the station, but inspires a vital confidence in the minds of non-technical visitors.

1- 3-IN. CHANNEL RELAY RACK, 36 UNITS
NATIONAL COMPANY, Malden, Mass.

While this 3-in. channel rack is not strictly in accordance with the specifications of telephone practice, it meets all ordinary requirements for radio transmitters and receivers. Telephone racks are higher, and are drilled and tapped at the front and rear, while this rack is drilled and tapped for panel mounting screws at the front only.

This rack is designed for 19-in. panels, and is drilled for panels in standard rack — unit widths — that is, multiples of 1¾ ins., as illustrated above.

ST. LOUIS PUBLIC LIBRARY JUL 20 1936

Heavy 6-in. angles are welded to the bottom of the rack. They are wide enough and heavy enough to support the rack, although it is advisable to bolt the angles to the floor. Without panels or equipment, the rack weighs approximately 94 lbs.

19-IN. PANELS

2-

The detail drawing on the preceding page gives the drilling dimensions for 19-in. panels. At the right, four sizes of panels are shown, and the usual arrangement of the slots which take the mounting screws. If desired, slots can be cut for every screw, but in widths up to four rack-units, two slots at each end are generally considered sufficient.

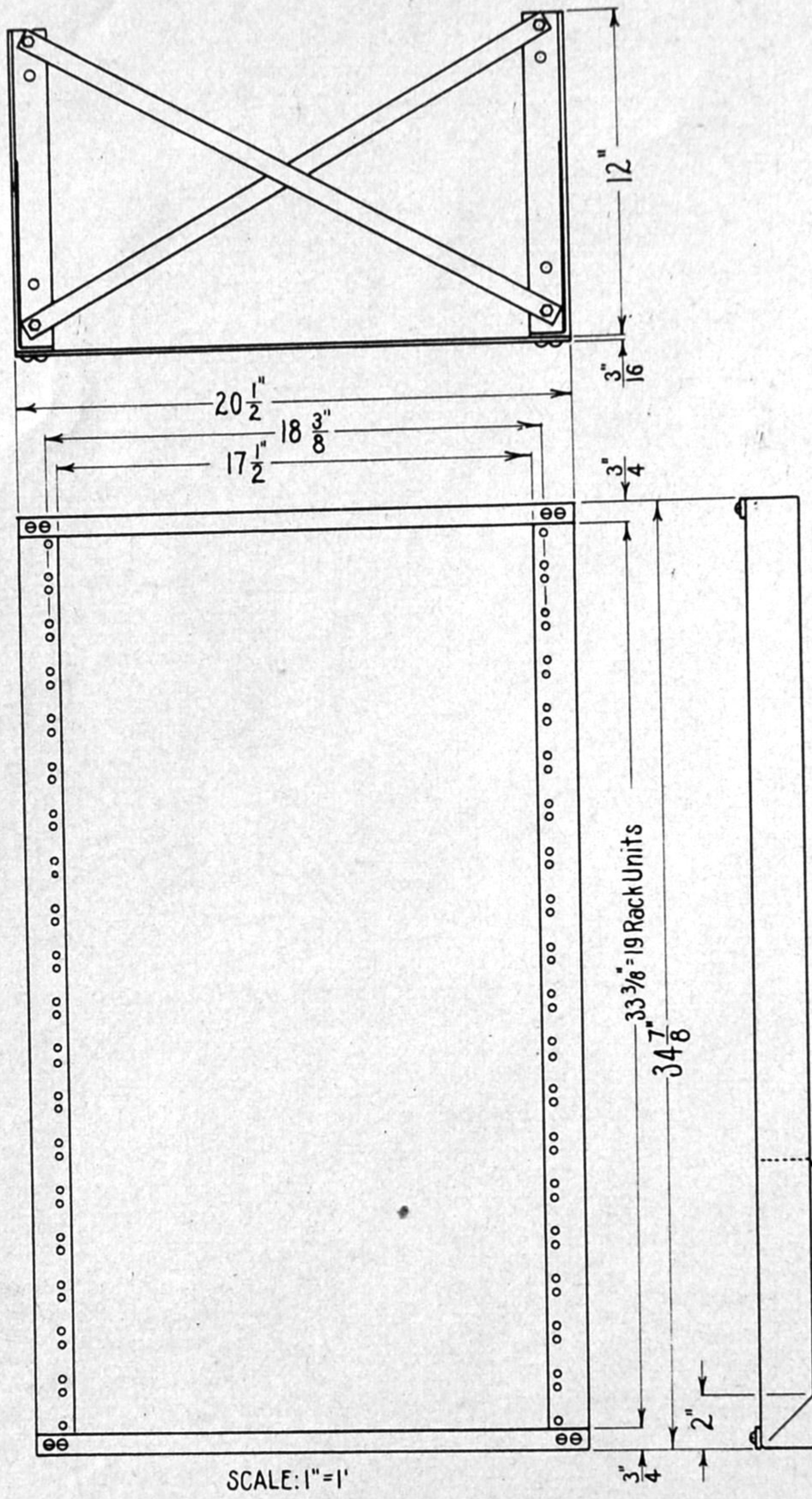

Dimensions of a table type rack, used for radio receivers, small transmitters, and various special equipment.

The overall length of the panels is 19 ins. The width of any panel must be a multiple of 1¾ ins., less 1/64 in. at the top and bottom, for clearance. This explains the dimensions given below. For example, a 2-unit panel should be 3½ ins. wide, but the clearance, reducing it a total of 1/32 in., makes it 2 15/32 ins. wide.

Various materials are used for panels. Usually they are of ¼-in. steel, although 3/16 in. is considered an adequate thickness by many engineers. For purposes of economy, ⅛-in. steel is sometimes used, but that is hardly rigid enough for the span between the channels. Bakelite panels should be ¼ in. thick to provide adequate mechanical strength. Aluminum panels 3/16 in. thick are satisfactory, unless they must carry heavy loads, but a thickness of ¼ in. is safer because there is no spring to aluminum. Once it is bent it takes a permanent set.

Bakelite panels are given a dull, sand finish, with the grain running horizontally. Steel and aluminum are finished in "telephone black" which is baked on, or one of the crystallizing lacquers. Aluminum panels are sometimes given a dull mat finish, with a coat of clear lacquer. WESTERN ELECTRIC sometimes departs from the conventional telephone black in favor of a very handsome gray lacquer.

TABLE TYPE RACK, 19 UNITS
NATIONAL COMPANY, Malden, Mass.

3-

Small transmitters, receivers, and many laboratory set-ups can be assembled advantageously on a table type rack, such as is illustrated on this page. The construction is heavy and rigid enough for all kinds of equipment. The frame is of ⅛-in. angle iron, with large braces welded to the corners. Additional support is given by cross-straps at the bottom. The finish is dull black baked enamel.

Drilling for panel-mounting screws is of standard spacing. There is space for 19 rack units on the frame. This rack has the advantage of being bolted together, so that it can be taken apart for transportation.

TABLE TYPE RACK, 25 UNITS
GENERAL RADIO COMPANY, Cambridge, Mass.

4-

No. 480-B is a table type rack similar to the design illustrated here,

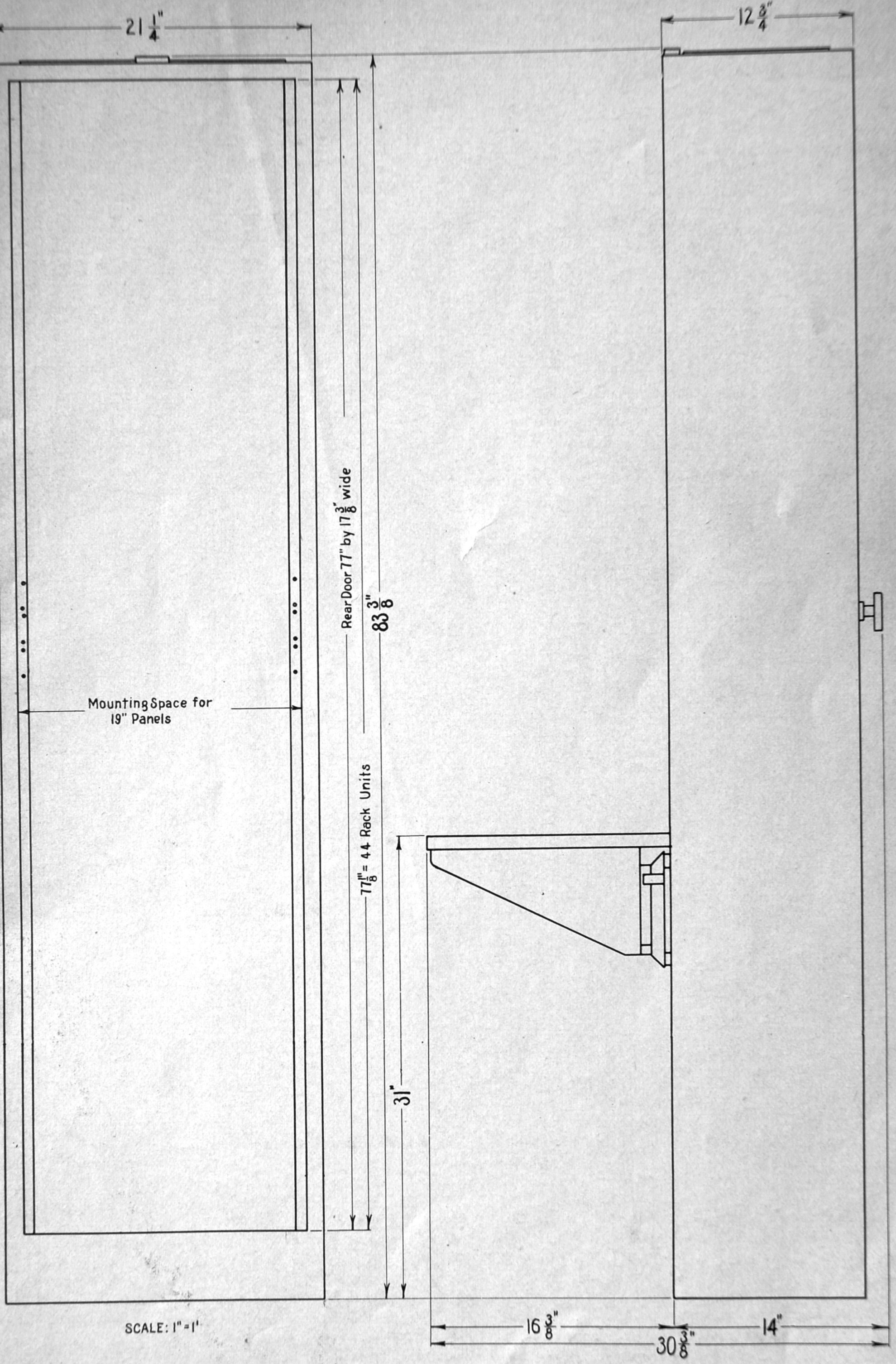

An enclosed telephone relay rack, arranged for standard 19-in. panels. Access to the rear is obtained thru a hinged door.

but with a frame 69⅛ ins. high overall, 20 ins. wide, and with base extensions 15 ins. deep. This rack accommodates 25 rack units. The rack alone weighs approximately 20 lbs.

5- ENCLOSED TELEPHONE RELAY RACK, 44 UNITS
WESTERN ELECTRIC COMPANY, New York City

While the ordinary 3-in. channel rack is adequate under most con-

4—First Section ASSEMBLY PRACTICE, *Depressed Panel Racks*

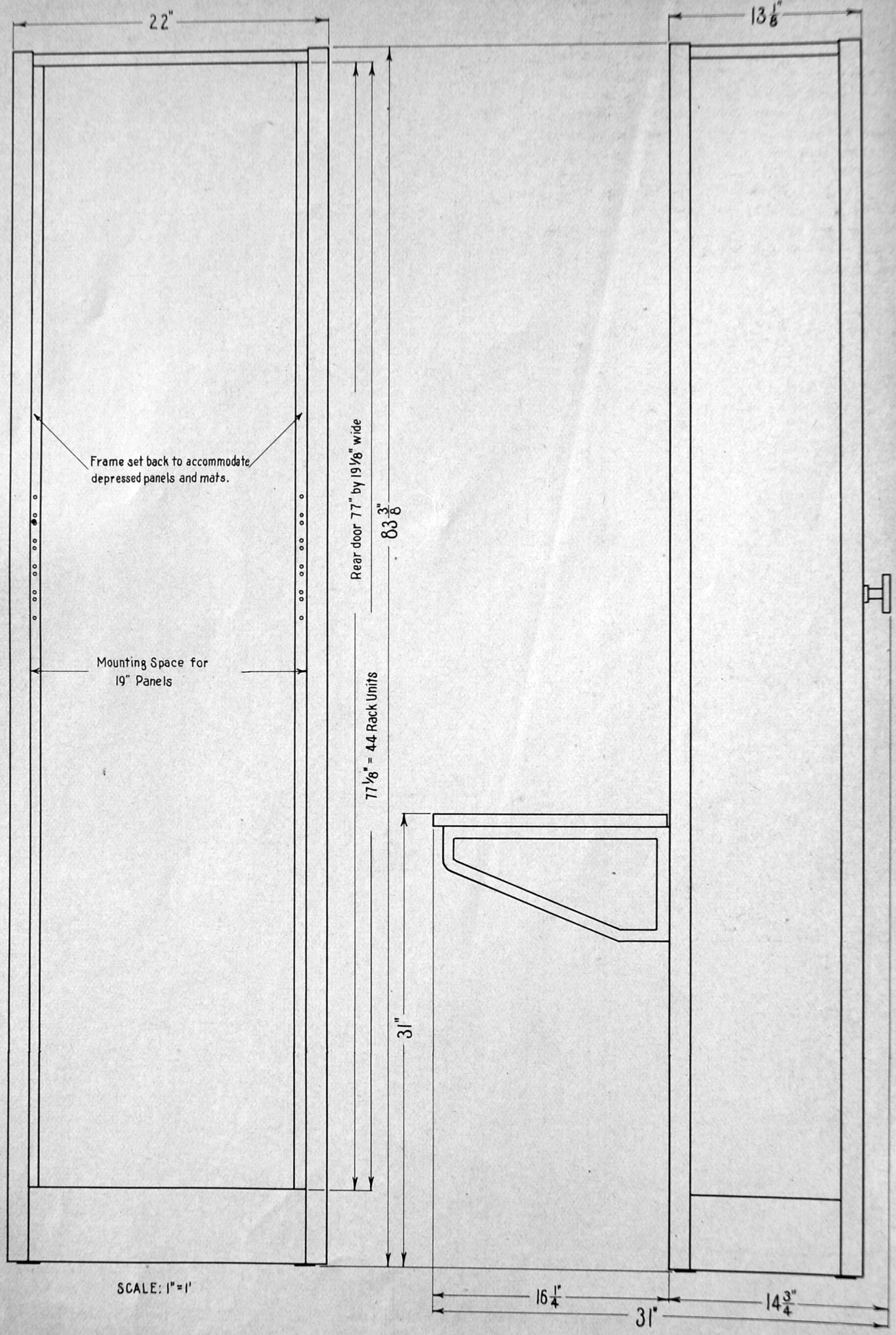

This enclosed telephone relay rack is designed to take the new-style depressed panels, to which are attached the plain front mats. This type of construction does away with all screws at the front.

ditions where radio equipment is under constant, expert supervision, the open construction does not give the finished appearance and the protection in stations which are frequented by lay visitors, or where the equipment is handled by non-expert attendants. Perhaps conditions to be met in police radio installations prompted the design of the enclosed rack illustrated on page 3.

The panels are fastened to a steel locker, the front of which is drilled in accordance with standard practice. At the rear is a locked door giving complete access to all the equipment. The construction, wiring, and assembly are carried out in the conventional manner. Dust covers are provided wherever they would be used in the open assembly, and can be removed through the rear door.

A shelf, set at the proper height to be used by the operator, is shown in the accompanying drawing. This is supported on sheet metal brackets.

6- DEPRESSED TELEPHONE RELAY RACK, 44 UNITS
WESTERN ELECTRIC COMPANY, New York City

The very latest adaptation of relay rack construction is the depressed-panel arrangement for which the enclosed rack, shown on the opposite page, is designed. The front opening accommodates 19-in. panels. The drilled strip, however, is set back, so that the panels on which the apparatus is mounted can be covered by plain panels, or mats, which cover up all the panel-mounting screws, and fit flush with the front of the rack cabinet.

Detail views of the depressed-panel method of assembly are given in the Sections on receivers and speech amplifiers. The panels on which the equipment is mounted are not flat, but are rather like long outlet boxes about 2 ins. deep, with mounting flanges, slotted like plain panels, at each end. The equipment is mounted at the back, with most of the wiring and small parts which may need replacing enclosed in the compartment at the front.

When the panel has been put in place, the plain front mat covers the panel, and serves as a shield for the wiring. Brackets, welded to the rear of the mat at each end, carry studs which go into nuts on the rear of the corresponding panel. Thus the mat is held in position without any screws to show on the front.

If a dust cover is required, the sides fit over the depression in the panel from the rear, and the cover is held by thumb nuts.

Details of the depressed-panel construction are given in the Third and Fifth Sections.

Usually the cabinet is finished in gray lacquer, with chromium-plated corner strips, and gray mats. The resulting appearance gives a most attractive and modern atmosphere to the broadcasting studio or control room. In fact, the effect of this design applied to electrical equipment is in keeping with the present trend in decorative schemes for offices and homes.

CAP.	GAP	PLATES	NO.
15	.018	3	STHS15
25	.018	4	STHS25
50	.018	7	STHS50

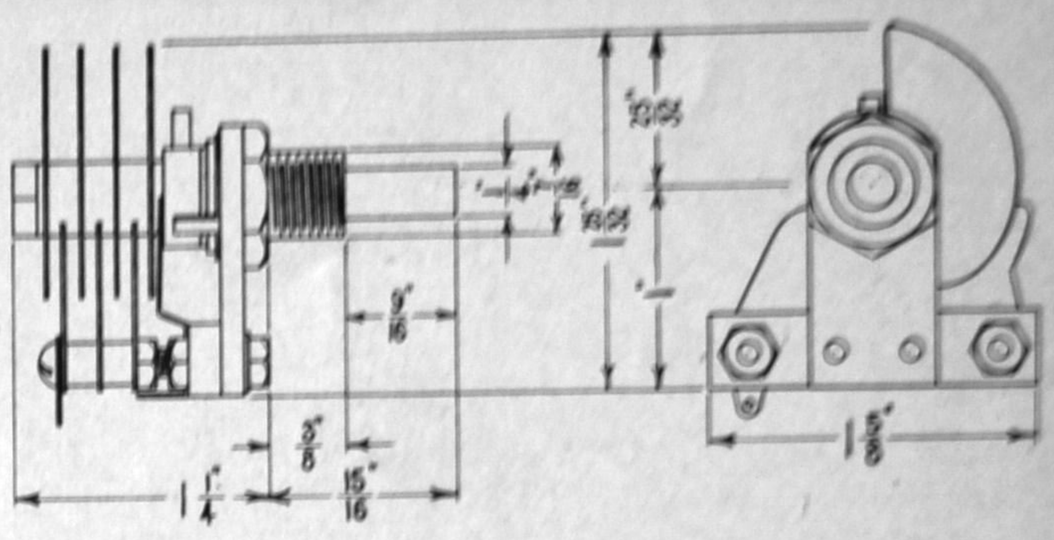

1-A-1 RECEIVER TUNING CONDENSER, S.L.W.
NATIONAL COMPANY, Malden, Mass.

This model condenser is intended for all purposes where a small variable capacity, low in losses, is required. It is of single-bearing design, and is provided with a single Isolantite strip for insulation. The plates, of S.L.W. shape, rotate thru 180°. In general design and small size, it is similar to 1-A-2. Contact to the rotary plates is made by a large-surface brush, wiping on a wide collar on the shaft. This type of condenser is mounted thru a 7/16-in. hole, and held by a nut at the front of the panel. Stops are provided to limit the movement of the shaft to 180°. Capacity is increased by clock-wise rotation. It should be noted that in over-all dimensions, this series is identical with the NATIONAL neutralizing condenser, type STN. Plates and frame are of aluminum.

CAP.	L	GAP	PLATES	NO.
50	2¼″	.026″	11	SE50
75	2¼″	.026″	15	SE75
100	2¼″	.026″	20	SE100
150	2¾″	.026″	29	SEH150
200	2¼″	.018″	27	SEH200
250	2¾″	.018″	32	SEH250
300	2¾″	.018″	39	SEH300
335	2¾″	.018″	43	SEH335
Thick Plates with Polished, Rounded Edges				
15	2¼″	.055″	6	SEU15
20	2¼″	.055″	8	SEU20
25	2¼″	.055″	9	SEU25

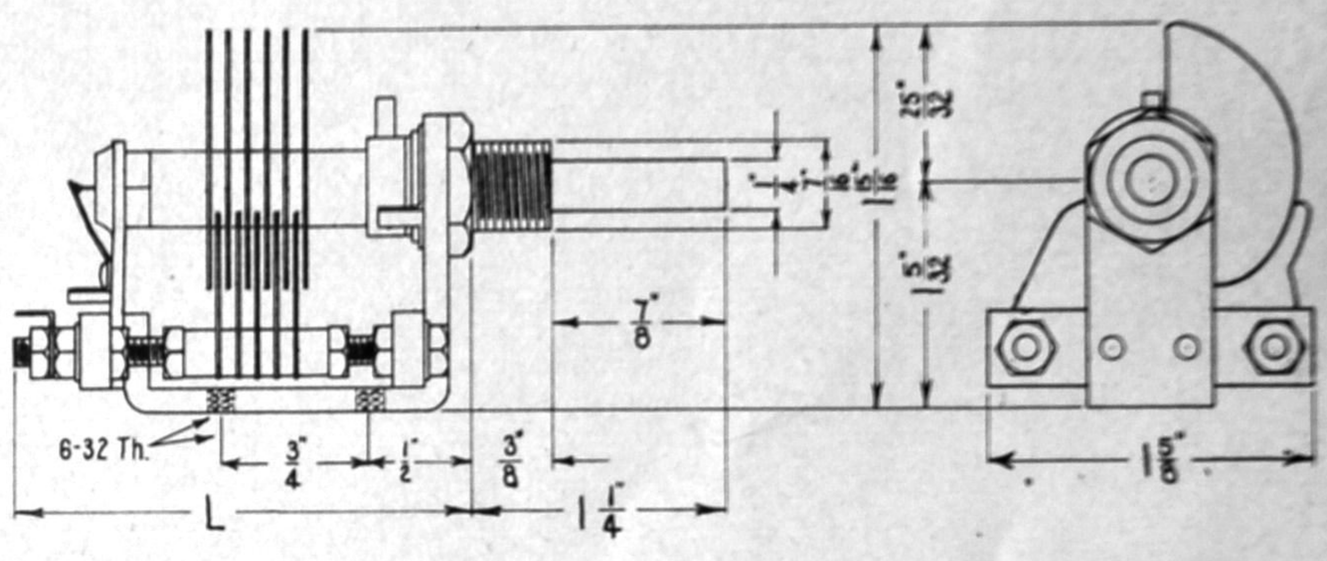

1-A-2 RECEIVER TUNING CONDENSER, S.L.F.
NATIONAL COMPANY, Malden, Mass.

For all types of receivers, this series is widely used. Losses are at a minimum, construction is rigid, and the size conveniently compact. The plates, of S.L.W. shape, turn 180° between stops. Capacity is increased by clock-wise rotation. A 7/16-in. mounting hole is required. It should be noted, however, that these condensers can be secured to a base plate by two 6–32 screws. The spacing from the bearing-assembly nut to these holes, as shown in the drawing, is the same for the different frame lengths. On the split-stator models, the set of forward plates are mounted on the front Isolantite strip, and the rear set of plates are mounted on the rear strip.

Two important electrical features of this series are the noiseless, constant-impedance pig-tail connection to the rotor, and the insulated front bearing which eliminates the shorted-turn effect thru the shaft, bearings, and frame. Plates and frame are of aluminum.

CAP.	L	GAP	PLATES	NO.
35	2¼″	.026″	9	ST35
50	2¼″	.026″	11	ST50
75	2¼″	.026″	15	ST75
100	2¼″	.026″	20	ST100
140	2¾″	.026″	28	ST140
150	2¾″	.026″	29	ST150
200	2¼″	.018″	27	STH200
250	2¾″	.018″	32	STH250
300	2¾″	.018″	39	STH300
335	2¾″	.018″	43	STH335
Split Stator Models				
50–50	2¾″	.026″	11–11	STD50
100–100	2¾″	.018″	14–14	STHD100

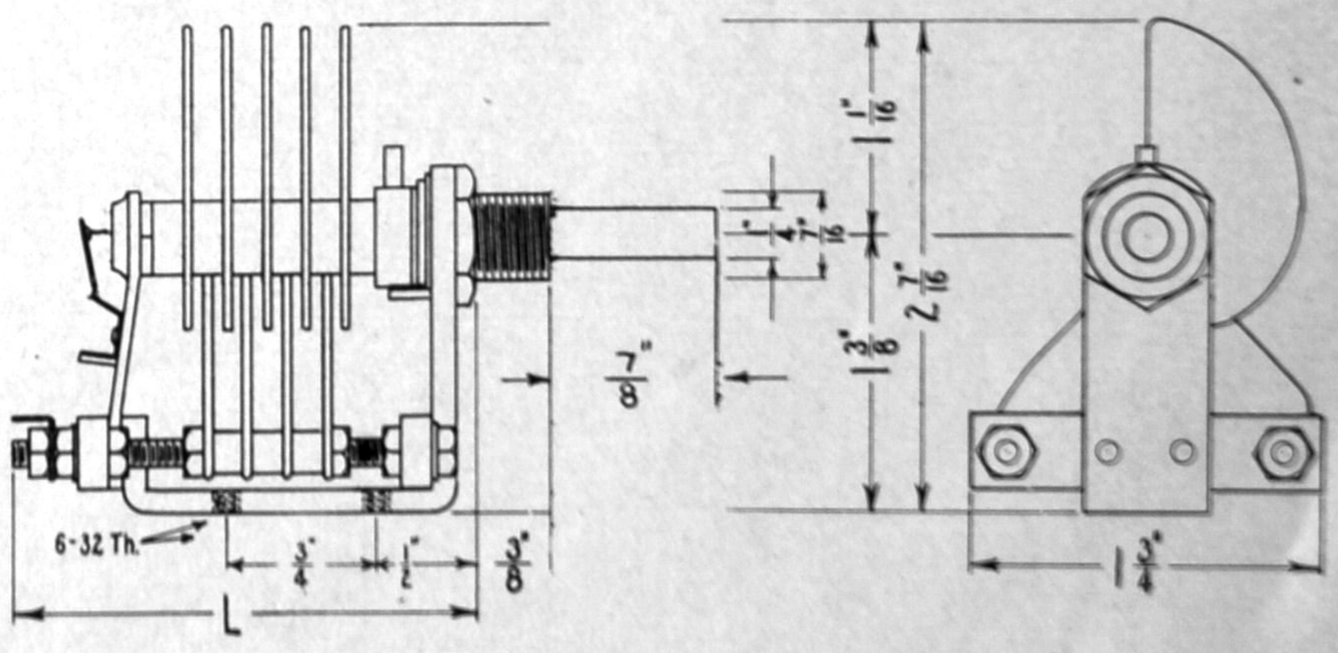

1-A-3 RECEIVER TUNING CONDENSER, S.L.W.
NATIONAL COMPANY, Malden, Mass.

This series can be used interchangeably with 1-A-2, the important difference being in the 270°, S.L.F. plates, and the slight increase in over-all height. Capacity is increased by clock-wise rotation. Either panel or base mounting can be employed. Both the noiseless pig-tail and the insulated front bearing are provided. The range of capacities covers all types of tuning circuits. Three sizes, of 15, 20, and 25 mmf., have extra-heavy plates with rounded, polished edges, making them suitable for special circuits requiring high voltages. Precision workmanship in the bearings and all the mechanical features assures permanence of calibration and freedom from backlash. Plates and frame are of aluminum. While the specification of special models is discouraged, counter-clockwise rotation or rear shaft extensions can be obtained if their use is found necessary. Modern design practice, however, is tending to avoid such special features.

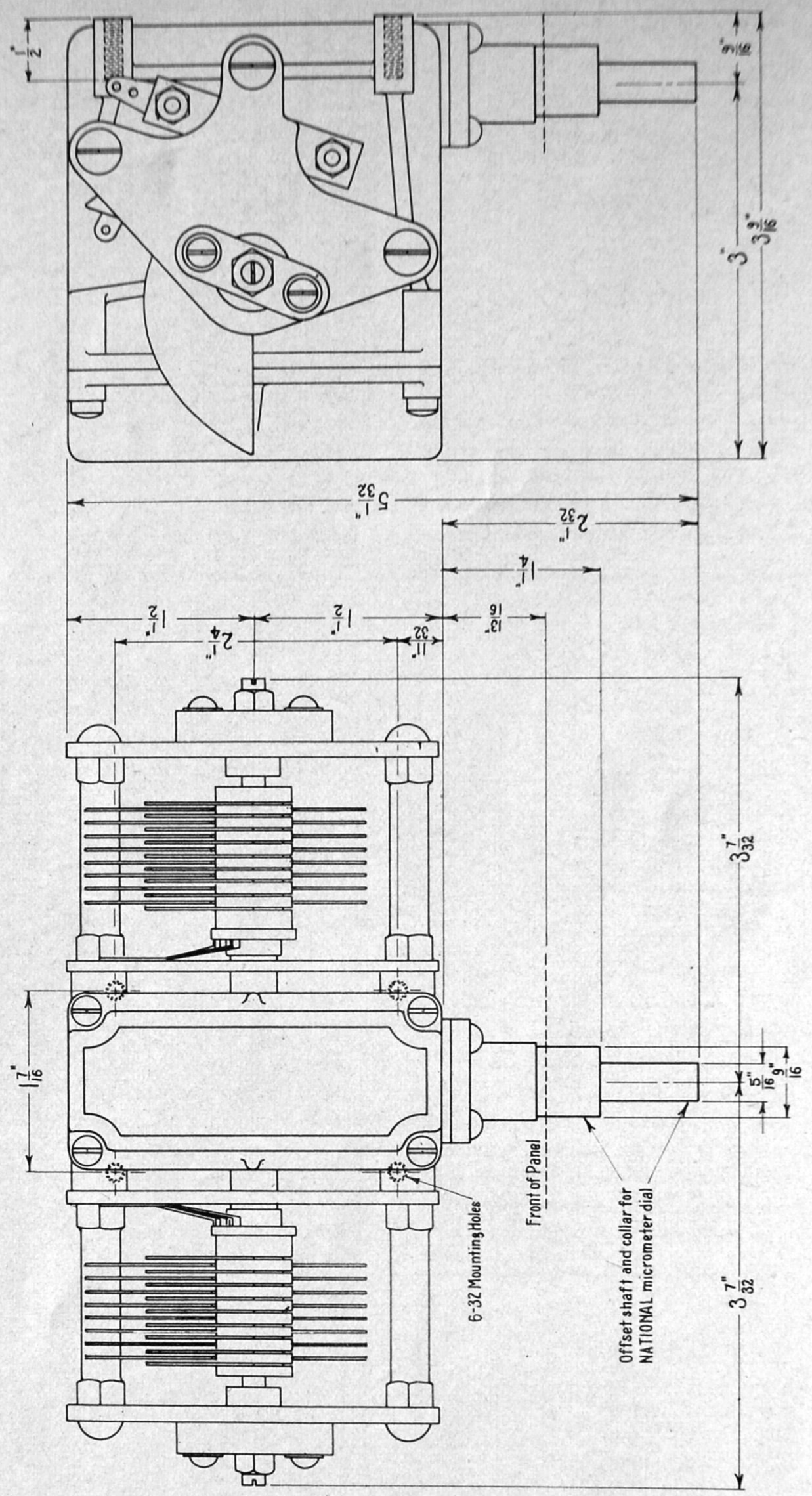

1-A-4 RECEIVER TUNING CONDENSER
NATIONAL COMPANY, Malden, Mass.

This type PW series of condensers, intended for extreme accuracy of calibration and tracking, as well as severe conditions of service where losses must remain low and performance kept high, comprises a worm-drive unit on which one, two, three, or four condenser sections are mounted.

The worm-drive has a gear split in two facing sections, with spring tension between them to maintain a load on the worm. This drive, carried on ball-bearings, is mounted in a die-cast housing of aluminum. The shaft extends thru an offset collar which forms a part of the mechanism of the special Micometer Dial designed for this type PW series.

The condenser sections, with S.L.F. plates, turn 180° between stops on the main gear. Each rotor section, carried on a 3/8-in. steel shaft, is insulated by a Bakelite sleeve. Plates are of aluminum, staked into brass supports. Unusual rigidity is provided by the two heavy center bearings, in addition to the two outer bearings, which are of bronze set in Bakelite bushings to insulate them from the aluminum end plates. Connections to the rotor sections are made with 4-finger phosphor bronze brushes.

The accompanying drawings show the four mounting holes on the bottom of the gear housing. The dotted line representing the front of the panel shows where the condenser unit should be mounted in order to bring the Micrometer Dial into proper position on the shaft and offset collar, and the distance of 9/16 in. from the bottom of the gear housing to the center of the shaft gives the relation between the base plate and the position of the dial. This dial, illustrated in detail elsewhere, is 4 5/8 in. in diameter. The ratio of the worm to the gear is 20 to 1, giving 10 revolutions of the dial shaft for the full movement of the condenser plates. The dial shows 0 at maximum capacity.

1-A-4 Continued

Single-section Unit: This unit is similar in appearances to the drawing on the opposite page, except that only one section is mounted on the gear housing and the rotor and stator are of the plate-spacer construction. The Rotor is not insulated. It is supplied with capacities of 150, 200, 350 and 500 mmf. single spaced, or with capacities up to 125 mmf. double spaced. This unit is designed primarily for use in laboratory equipment.

Double-section Unit: The drawing on the opposite page illustrates the double-section unit. The elevation can be taken from the drawing on this page, as the design details are identical, except for the addition of the outer sections. Note that the inner end plates are of Bakelite so that they can carry the brushes which contact the rotor sections, while the outer end plates are of $\frac{1}{8}$ in. aluminum.

Triple-section Unit: The triple-section unit is similar, on one side, to the drawing on the opposite page, and on the other side, to the drawing on this page. Two inner Bakelite end plates, on the double side, carry the brushes, and between them is an aluminum shield. This makes the distance from the center of the gear housing to one end $3\frac{7}{32}$ ins. on one side and $5\frac{1}{4}$ ins. on the other.

Four-section Unit: The front elevation and the end of the four-section unit are shown on this page. The plan view can be taken from the drawing on the opposite page. Note that the end plates are spaced by sets of three heavy brass pillars which give an absolutely rigid framework structure.

Capacities: The double-section, the triple-section and the four-section condensers are supplied in two values — 12 to 225 mmf. per section or 10 to 150 mmf. per section.

Drive Unit: The drawing below shows the PW-0 drive unit for use in driving special equipment. It is supplied with the Isolantite insulated coupling TX-9 illustrated on Page 38, Second Section.

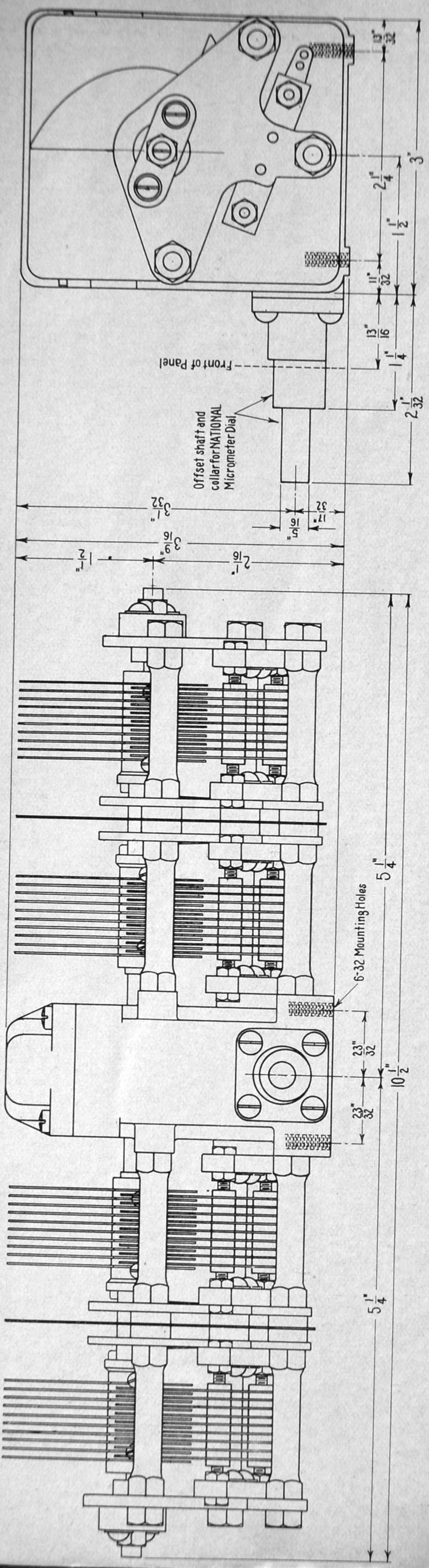

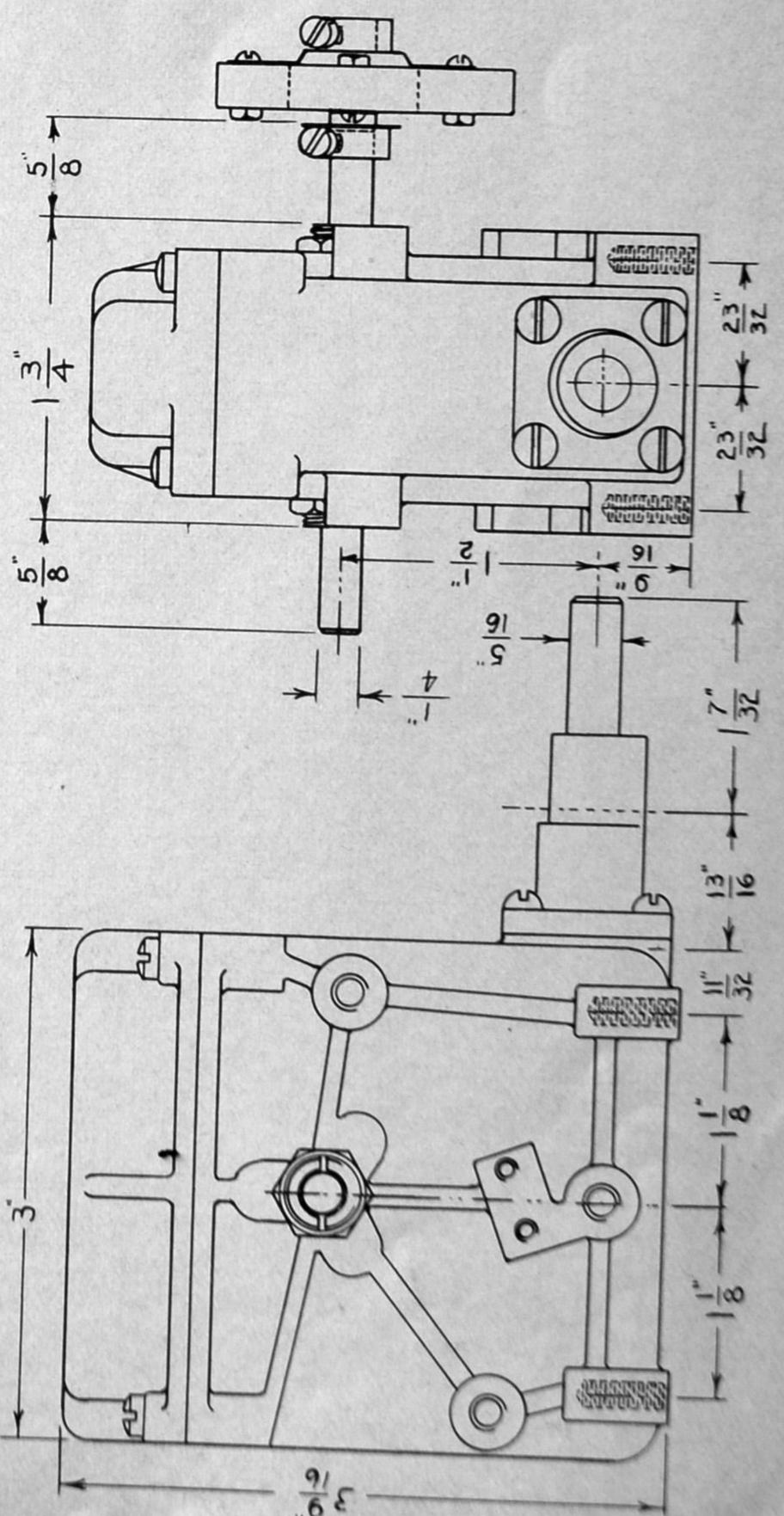

Cap.	Plates	No.
150	9	EMC-150
250	14	EMC-250
350	18	EMC-350
500	26	EMC-500
1,000	56	EMC-1,000
Split Stator Models		
350–350	18–18	EMCD-350

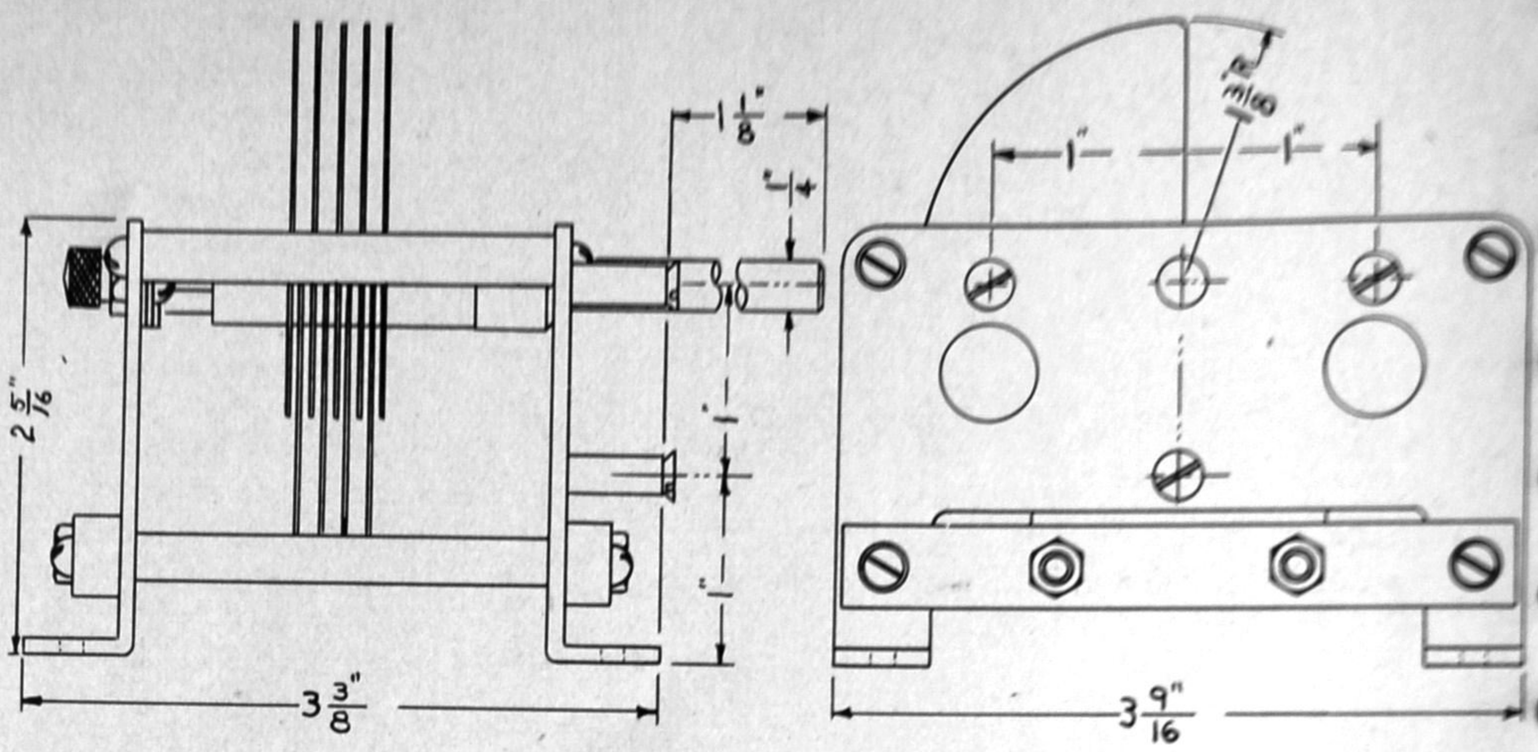

1-A-5 RECEIVER TUNING CONDENSER

National Company, Inc., Malden, Mass.

The EMC series of variable condensers are used for broadcast and short wave receivers, and for small transmitters where a peak voltage rating of 1,000 is adequate. The plate shape is S.L.W. with a rotation of 180°. Rotor connection is made through a phosphor bronze brush. Insulation is of Isolantite and the frame and plates are of aluminum.

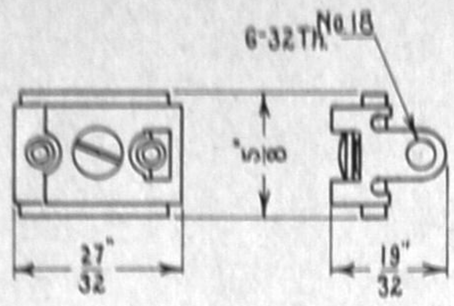

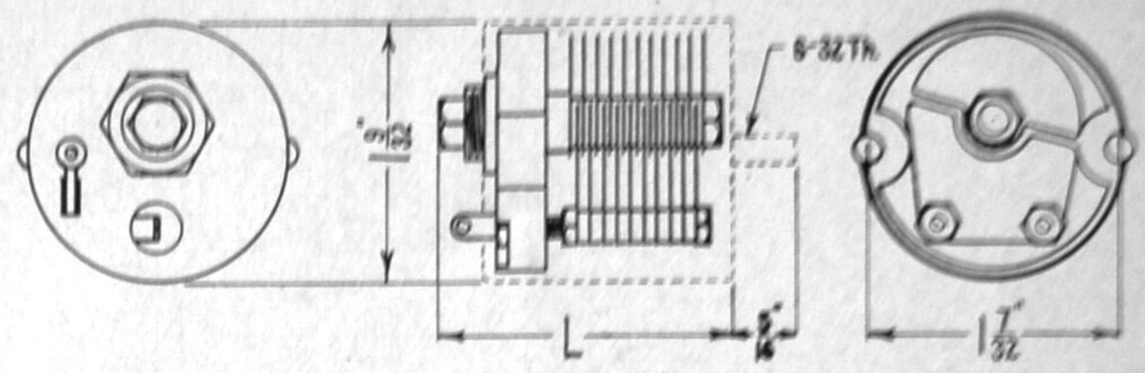

1-B-1 MICA PADDING CONDENSER
NATIONAL COMPANY, Malden, Mass.

Type M30 is a very small mica padding condenser, mounted on a Steatite base, equipped with lugs so arranged that the condenser can be carried on the wiring, without being fastened otherwise. The maximum capacity is 30 mmf.

1-B-2 AIR PADDING CONDENSERS
NATIONAL COMPANY, Malden, Mass.

A type of air padding condenser specially designed for zero temperature coefficient under all ordinary operating conditions. The condenser is mounted in an aluminum shield thru which the adjusting nut protrudes. In the type W75, the maximum capacity is 75 mmf., and L is 1¼ ins.; type W100, maximum capacity is 100 mmf., and L is 1½ ins.

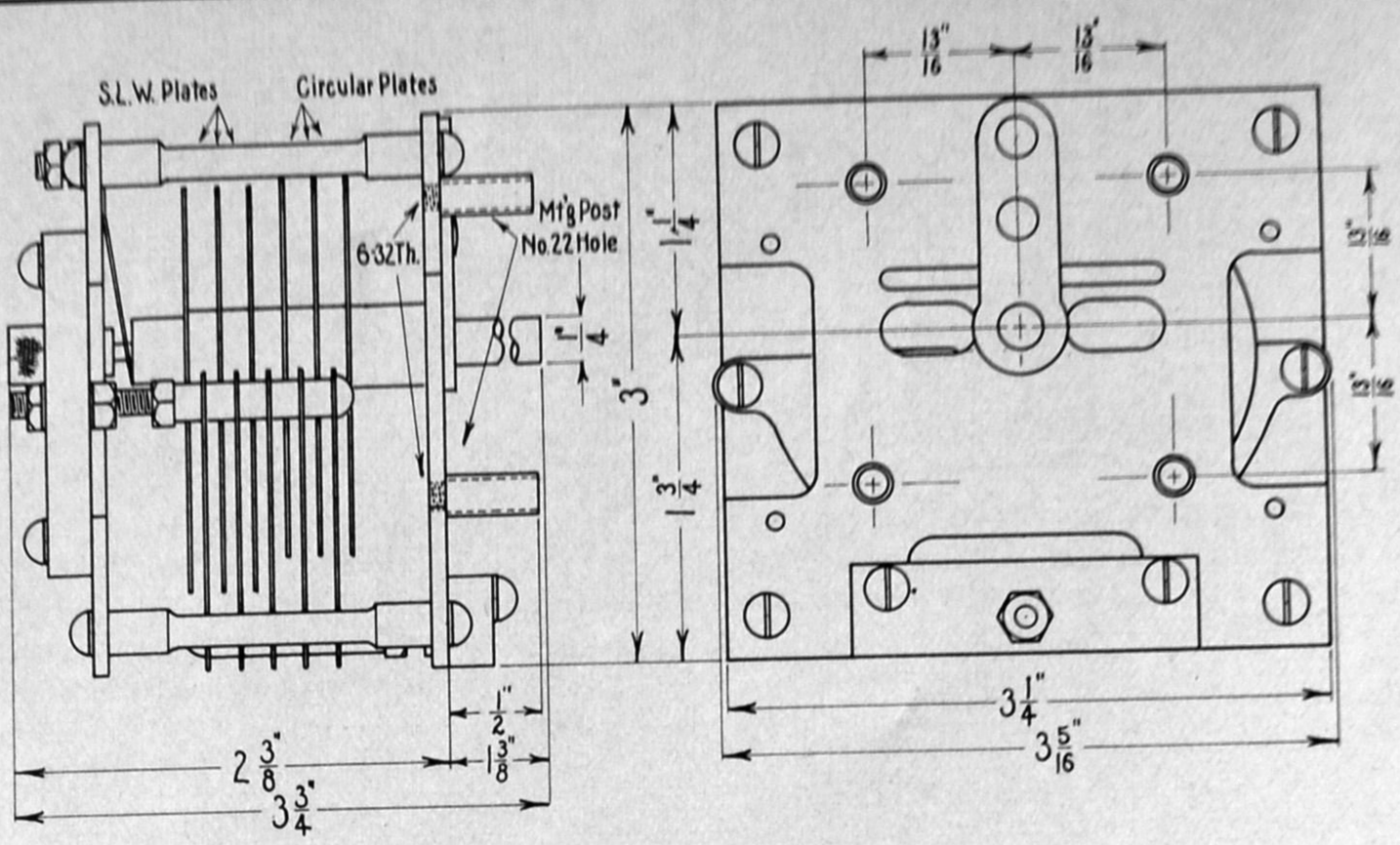

1-C-1 FREQUENCY METER CONDENSER

NATIONAL COMPANY, Malden, Mass.

Type 40–75 is a frequency meter condenser with 3 circular rotor plates and 3 S.L.W. plates, giving a minimum capacity of 40 mmf., and a maximum of 75 mmf. Four 10-A-1 mounting legs are furnished, and a 10-B-1 shaft extension.

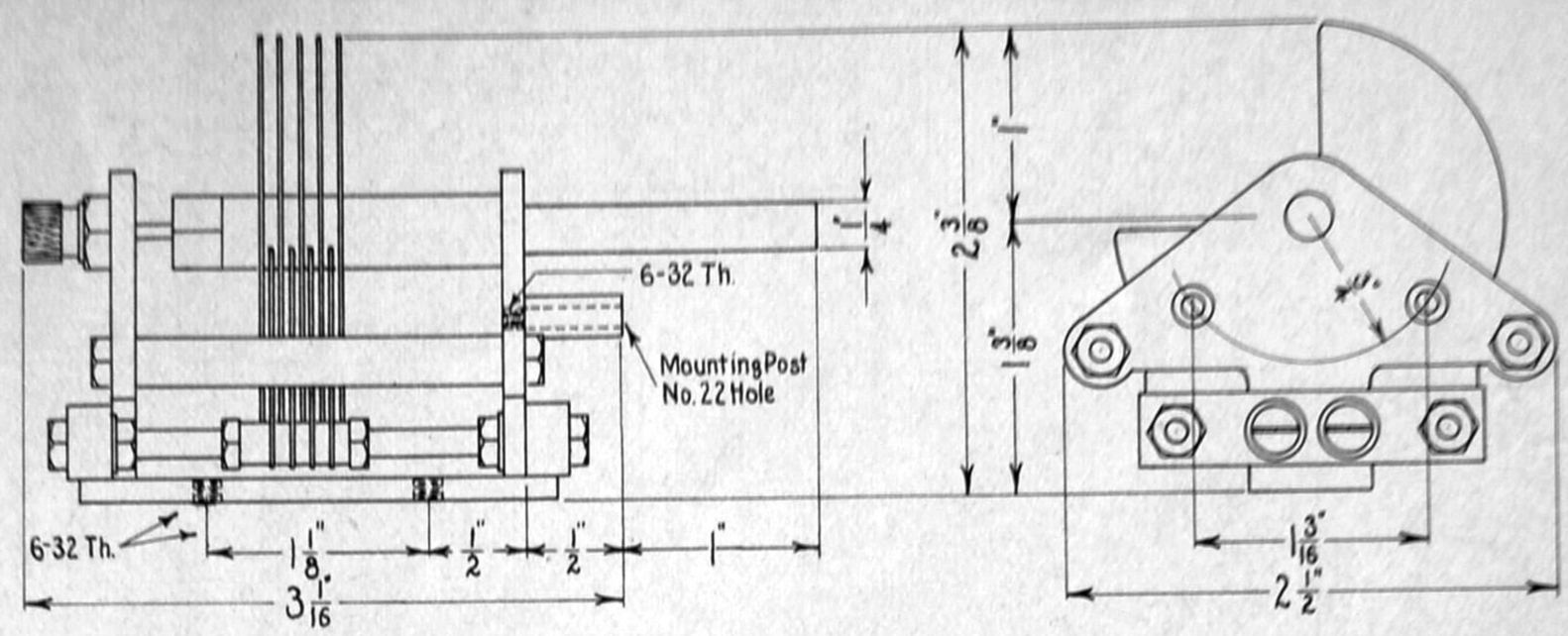

CAP.	PLATES	PEAK VOLTS	NO.
	For Oscillators, Buffers, Doublers		
100	10	1,000	TMS100
150	14	1,000	TMS150
250	23	1,000	TMS250
50–50	5–5	1,000	TMS50D
100–100	9–9	1,000	TMS100D
	For Low C, Type 210 Amplifiers		
35	8	2,000	TMSA35
50	11	2,000	TMSA50

1-D-1 LOW-POWER TRANSMITTER TUNING CONDENSER
NATIONAL COMPANY, Malden, Mass.

Intended for low-power transmitters, this condenser is compactly designed with ample Steatite-Isolantite insulation for the voltage ratings. It can be mounted on the front panel by two spacing posts, or with stand-off insulators secured to the frame. The front bearing is conical, with a rear radial bearing and a single-ball thrust. Note the special 2,000-volt types for low C, type 210 amplifiers. Plates and frame are of aluminum.

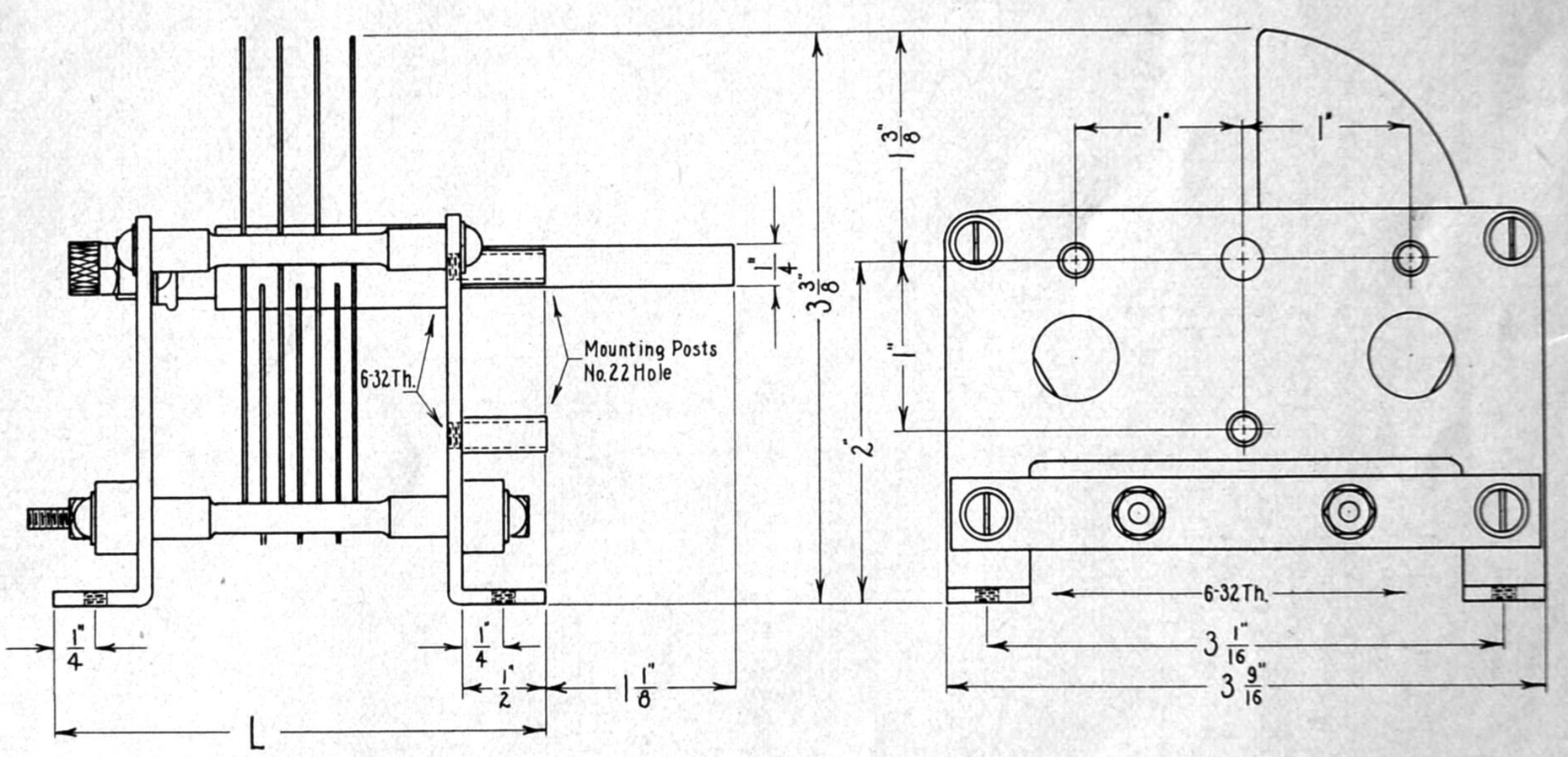

CAP.	L	PLATES	PEAK VOLTS	NO.
50	3″	7	3,000	TMC50
100	3½″	13	3,000	TMC100
150	4⅝″	21	3,000	TMC150
100–100	6¾″	13–13	3,000	TMC100D

1-D-2 MODERATE-POWER TRANSMITTER TUNING CONDENSER, NATIONAL COMPANY, Malden, Mass.

A design for higher voltage ratings, up to 3,000 volts. This model can be fastened to the front panel by three spacing posts, or mounted on four stand-off insulators. The edges of the plates are rounded and buffed. The front bearing is conical, and the rear radial bearing has a single-ball thrust. Insulation is of Steatite-Isolantite. In the split stator model, the stator is supported at both ends. Plates and frame are of aluminum. For RK-20, RK-18, RCA-800, 830, 203-A, and 210.

1-D-3 HIGH-POWER TRANSMITTER TUNING CONDENSER
NATIONAL COMPANY, Malden, Mass.

No. TMU condensers are designed for tube transmitters equipped with 849, 860, 852, 861, 204-A, and similar tubes. The heavy rotor and stator plates have milled and polished edges. Micalex is used for insulation. Contact to the rotor plates is made thru a laminated brush having a contact area ⅛ by ½ in. The front bearing is conical, while the rear radial bearing has a single ball thrust.

No.	Peak Volts	L	Plates	Cap.
TMU- 50A	7,500	6⅝″	8	50
TMU-150A	7,500	11″	23	150
TMU-250A	7,500	14⅞″	37	250

Special sizes and higher voltage ratings can be supplied in this type of condenser.

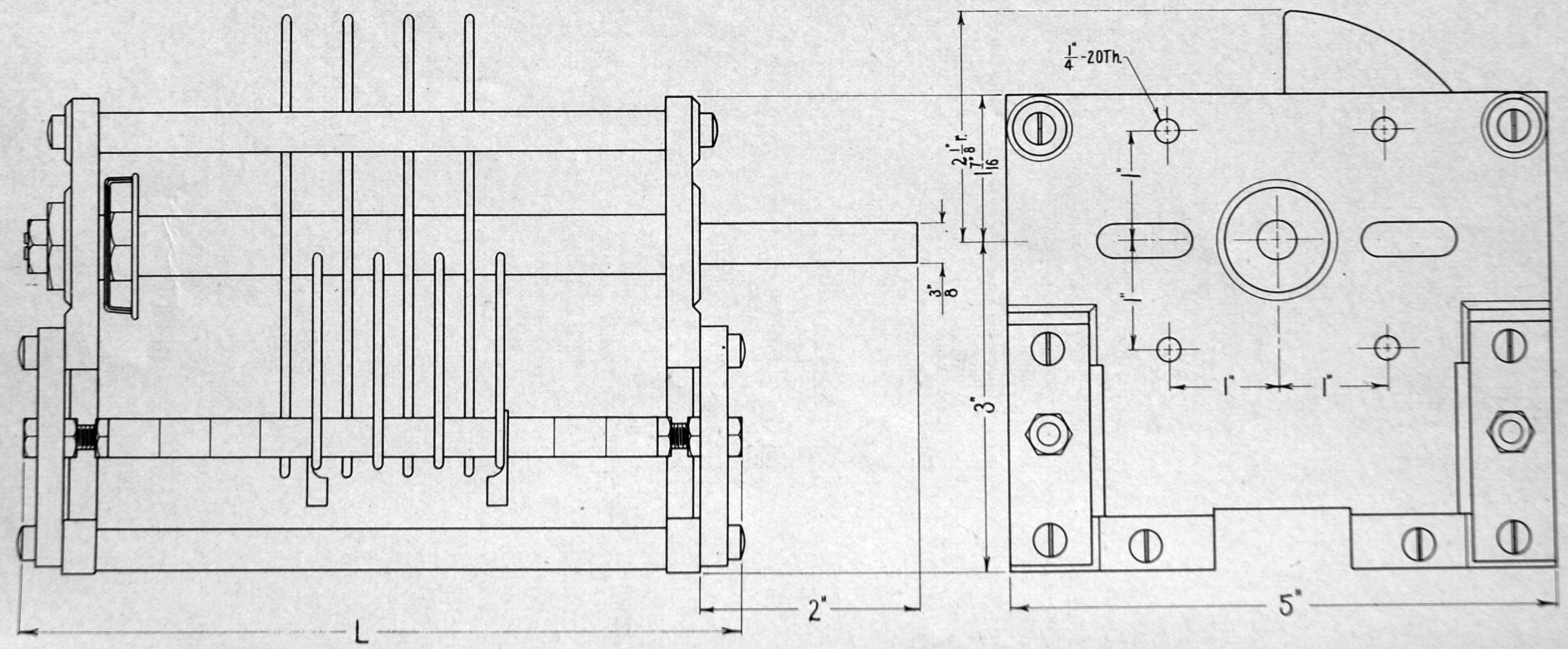

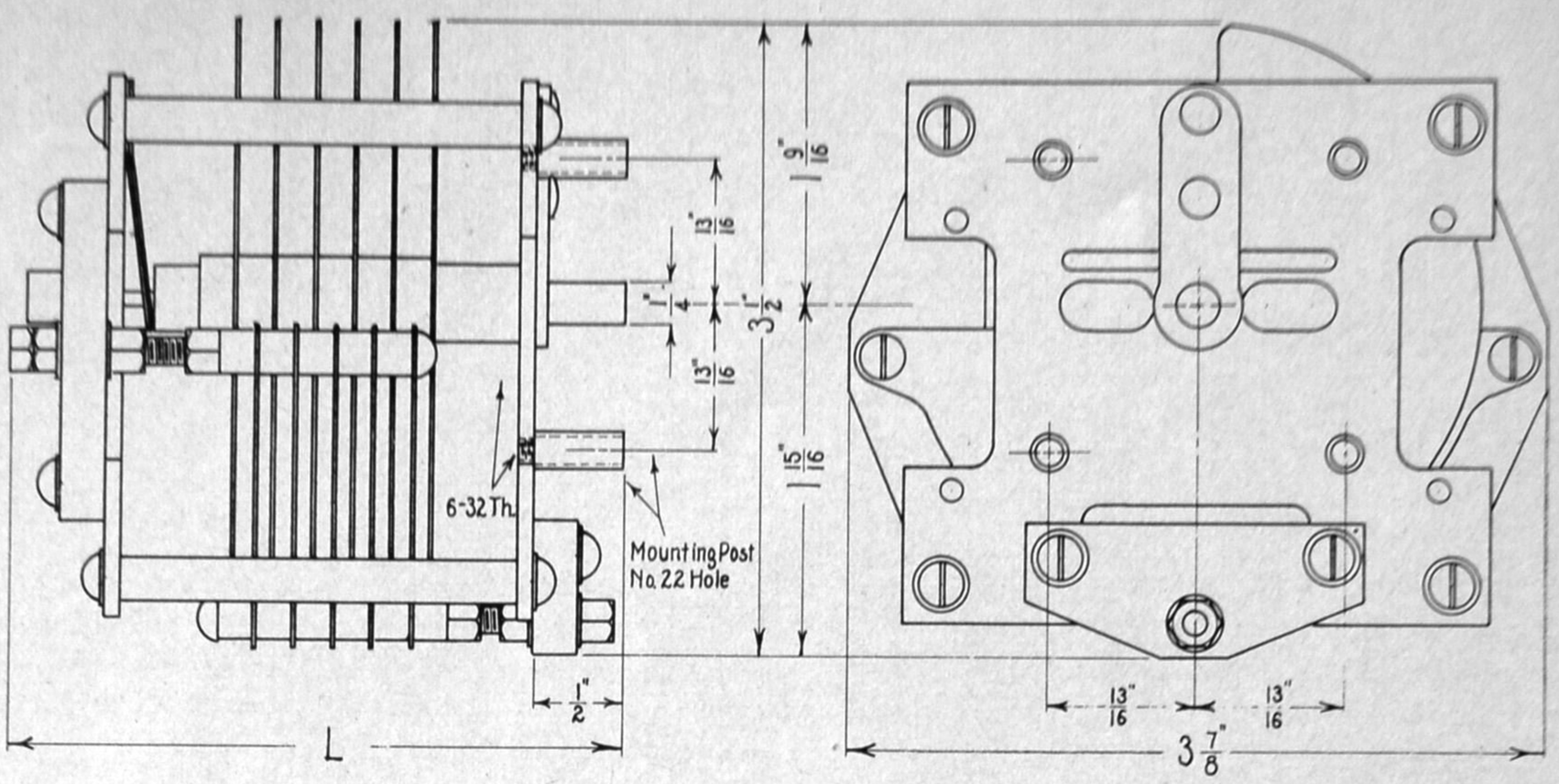

1-D-4 STANDARD TRANSMITTING CONDENSER

NATIONAL COMPANY, Malden, Mass.

No. TM condensers are of a long-established design, with the result that many communications companies and government departments specify them as standard parts in transmitters of moderate power. The aluminum plates have milled and polished edges. Insulation is of Isolantite. The front bearing is conical, with a single-ball thrust bearing at the rear. The front plate is drilled and tapped for mounting a NATIONAL A dial, of the type illustrated in 2-A-5 of this section.

Cap.	L	Peak Volts	Plates	No.
100	3 1/4"	3,000	11	TM-100
150	4 9/16"	3,000	17	TM-150
230	4 9/16"	3,000	23	TM-230
50	4 9/16"	6,000	12	TM-50A
100	6 7/8"	6,000	23	TM-100A
150	9 5/16"	6,000	35	TM-150A
100–100	12 9/16"	6,000	46	TMP-100A

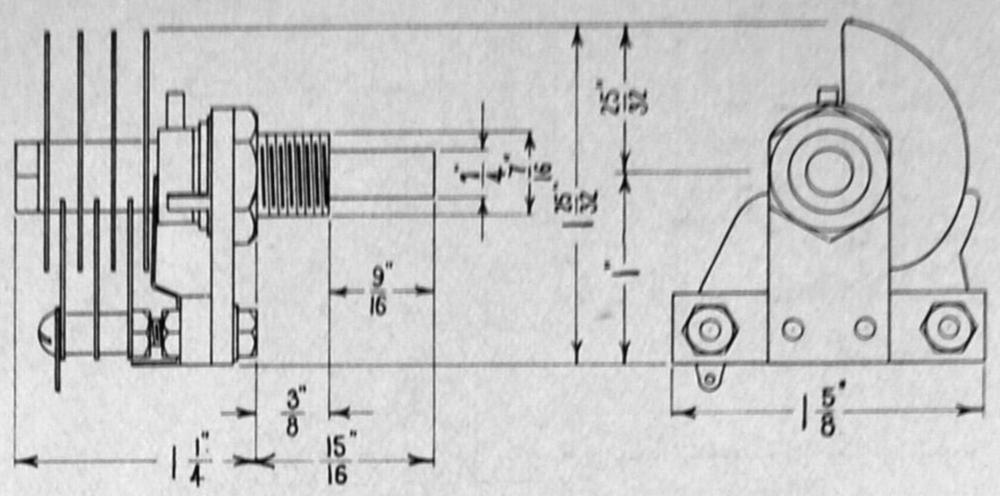

1-E-1 TRANSMITTER NEUTRALIZING CONDENSER

NATIONAL COMPANY, Malden, Mass.

No. STN is a neutralizing condenser designed particularly for neutralizing 245, 247, 210 and similar tubes in amplifier, buffer, or doubler stages. The maximum capacity is 18 mmf., with a peak-voltage breakdown of 3,000 volts. Insulation is provided by a single Isolantite strip. Contact to the rotating plates is made through the heavy front bearing, and by a wide-surface brush contacting a flange on the shaft. The condenser is mounted through a single 7/16-in. hole in the panel.

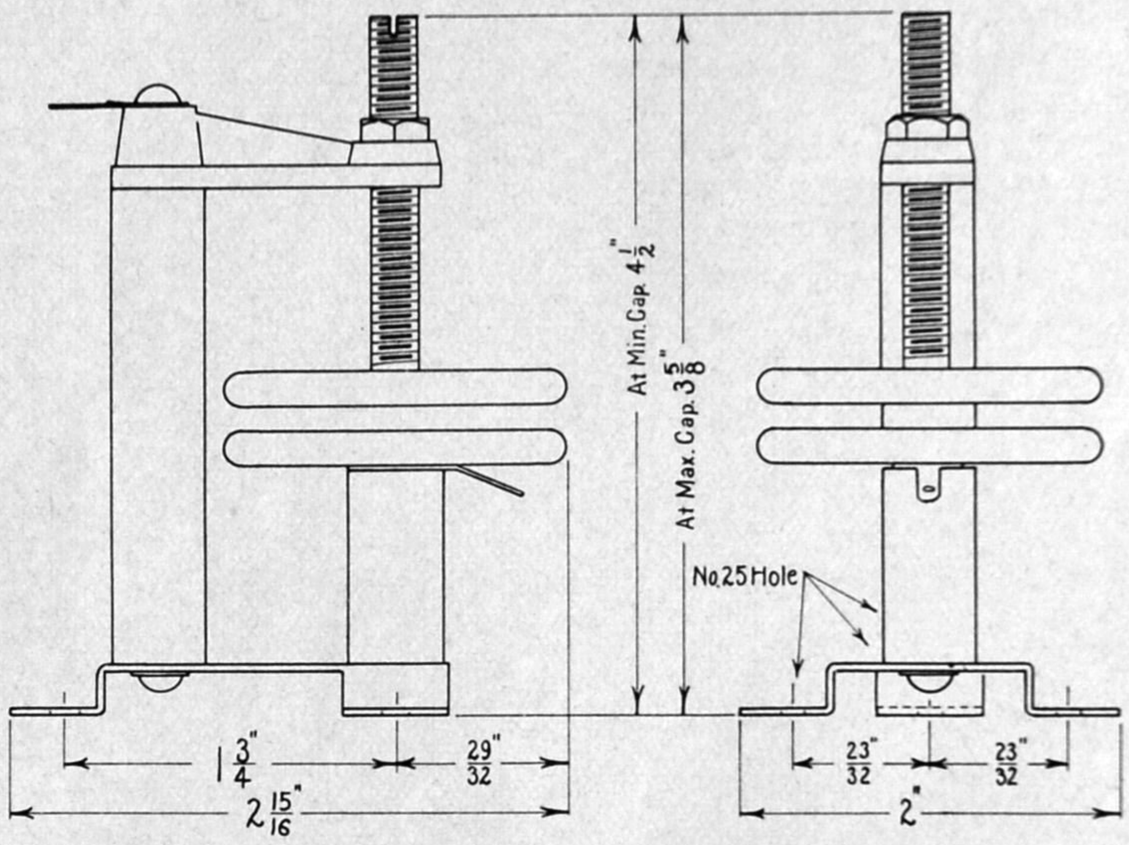

1-E-2 TRANSMITTER NEUTRALIZING CONDENSER

NATIONAL COMPANY, Malden, Mass.

No. NC has been designed for high-voltage circuits using the RCA-800 tube. Both plates are mounted on heavy Isolantite pillars, insulating them from the ground. The upper plate is carried on a cast aluminum arm. This sturdy construction eliminates all possibility of vibration. Adjustment can be made with an insulated screw-driver, and the position locked by the nut furnished. Or, if desired, a Bakelite disc could be secured to the threaded shaft for adjusting purposes.

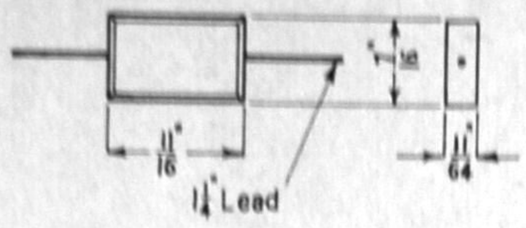

1-F-1 MIDGET MOLDED MICA CONDENSERS
AEROVOX CORP., Brooklyn, N. Y.

No. 1468 series is the smallest of the molded mica condensers. As shown in the table below, capacities are available from 40 to 500 mmf. The rated working voltage is 175 A.C., or 250 D.C.

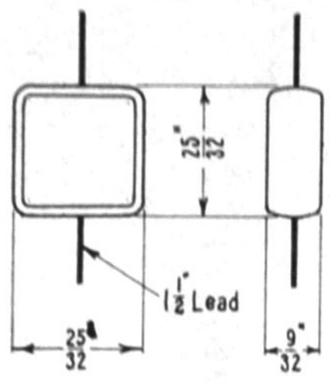

1-F-2 MIDGET MOLDED MICA CONDENSERS
AEROVOX CORP., Brooklyn, N. Y.

No. 1467 series condensers are similar in purpose to the 1468 series, and are also rated at working voltages of 175 A.C. or 250 D.C. The Bakelite casing is more rugged, yet light enough that the condensers can be carried by the leads, as part of the wiring, without the need of mechanical fastening. Capacity values range from 40 to 2,500 mmf. Accuracy ±10%.

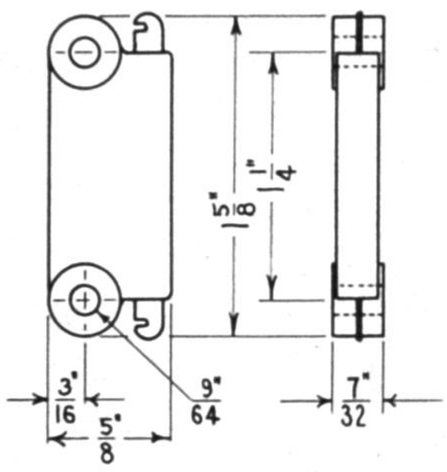

1-F-3 MIDGET MOLDED MICA CONDENSERS
AEROVOX CORP., Brooklyn, N. Y.

No. 1461 series condensers, because of their small size and the provision for mounting, are adapted to a wide variety of uses. Also, they have a higher working voltage rating: 300 A.C. or 450 D.C. They are furnished in capacity values ranging from 40 to 3,000 mmf.

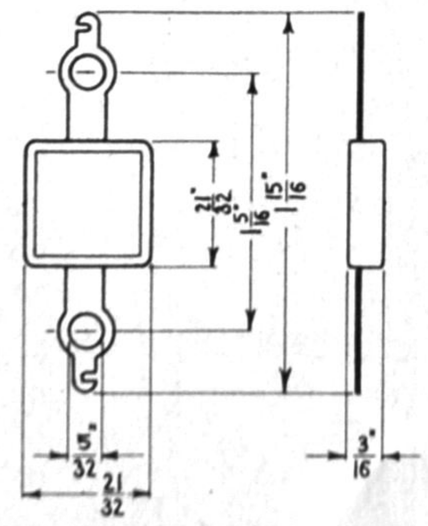

1-F-4 MIDGET MOLDED MICA CONDENSERS
AEROVOX CORP., Brooklyn, N. Y.

No. 1465 series condensers are slightly smaller than the 1467 types, and are fitted with lugs which provide a means for mounting as well as for wiring. Their rated working voltages are 175 A.C. or 250 D.C. Standard capacity values range from 40 to 1,000 mmf. The thickness of the Bakelite case is the same for all values.

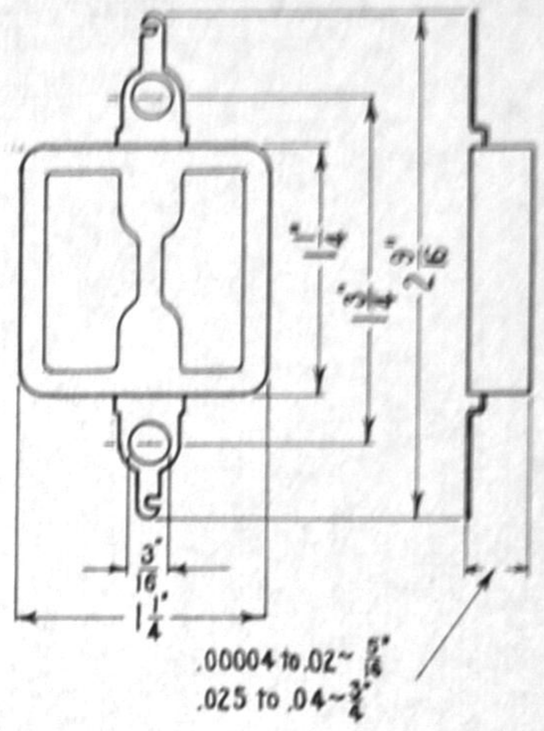

1-F-5 GENERAL PURPOSE MOLDED MICA CONDENSERS
AEROVOX CORP., Brooklyn, N. Y.

No. 1450 series condensers offer the advantage of higher working voltage ratings of 350 A.C. or 500 D.C., their larger size permitting heavier insulation. Accuracy ±10%.

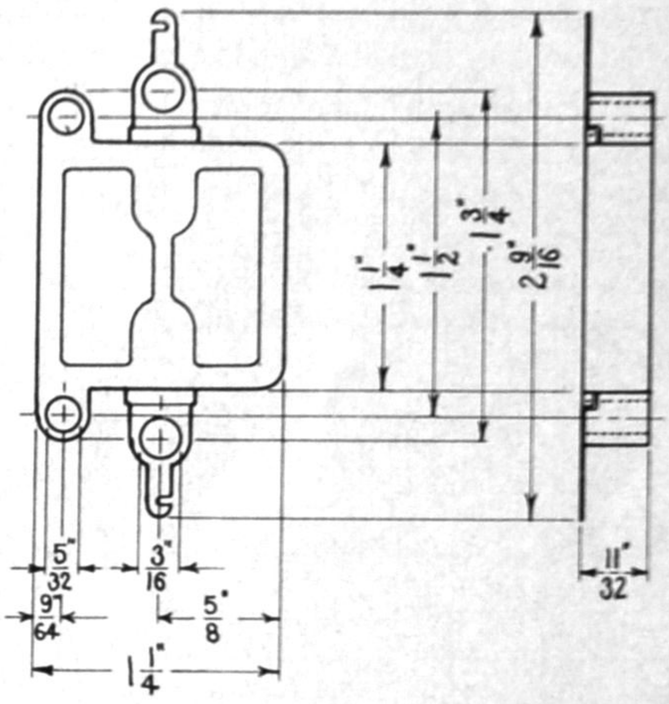

1-F-6 GENERAL PURPOSE MOLDED MICA CONDENSERS
AEROVOX CORP., Brooklyn, N. Y.

No. 1455, 1456, and 1457 series are similar in mechanical dimensions, but vary in voltage ratings and ranges of capacities available.

CAP.	No. 1468 175 v.	No. 1467 175 v.	No. 1461 300 v.	No. 1465 175 v.	No. 1450 350 v.	No. 1455 350 v.	No. 1456 875 v.	No. 1457 1,750 v.
40	xx	xx	xx	xx				
50	xx	xx	xx	xx	xx	xx	xx	xx
70	xx	xx	xx	xx	xx	xx	xx	xx
75	xx	xx	xx	xx	xx	xx	xx	xx
100	xx	xx	xx	xx	xx	xx	xx	xx
150	xx	xx	xx	xx				
200	xx	xx	xx	xx	xx	xx	xx	xx
250	xx	xx	xx	xx	xx	xx	xx	xx
370	xx	xx	xx	xx	xx	xx	xx	xx
500	xx	xx	xx	xx	xx	xx	xx	xx
1,000		xx	xx	xx	xx	xx	xx	xx
1,500		xx	xx		xx	xx	xx	xx
2,000		xx	xx		xx	xx	xx	xx
2,500		xx	xx		xx	xx	xx	
3,000			xx		xx	xx	xx	
4,000					xx	xx	xx	
5,000					xx	xx	xx	
6,000					xx	xx	xx	
8,000					xx	xx	xx	
10,000					xx	xx	xx	
15,000					xx	xx		
20,000					xx	xx		
25,000					xx	xx		
30,000					xx	xx		
40,000					xx			

CONDENSERS, *High Voltage*

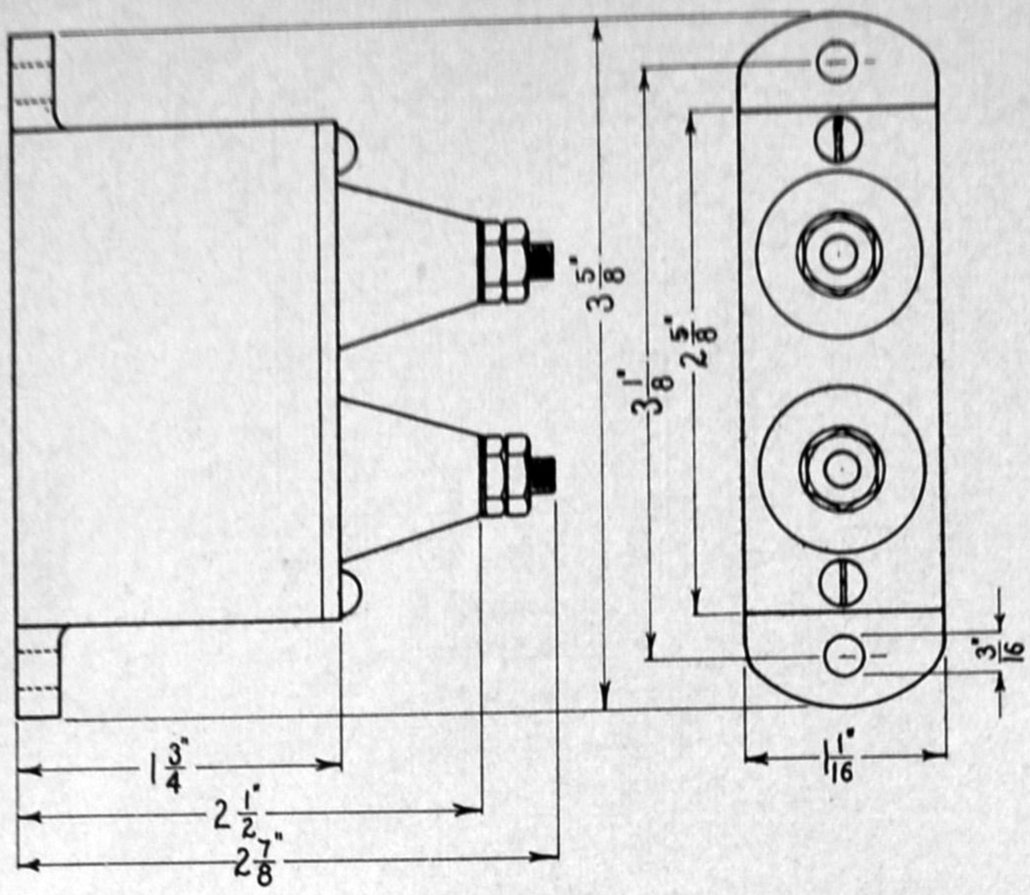

1-G-1 HIGH-VOLTAGE MICA TRANSMITTER CONDENSERS

AEROVOX CORP., Brooklyn, N. Y.

No. 1881, 1882, and 1883 series are similar in mechanical dimensions. but vary in working voltage ratings as shown in the accompanying table. They are used widely in commercial transmitters, and were designed originally to meet specifications of the Army and Navy. Accuracy ±10%.

Standard Values and A.C. Working Voltages

CAP.	No. 1881 500 v.	No. 1882 1,250 v.	No. 1883 2,500 v.
50	xx	xx	xx
100	xx	xx	xx
200	xx	xx	xx
250	xx	xx	xx
370	xx	xx	xx
500	xx	xx	xx
1,000	xx	xx	xx
1,500	xx	xx	xx
2,000	xx	xx	xx
2,500	xx	xx	xx
3,000	xx	xx	
4,000	xx	xx	
5,000	xx	xx	
8,000	xx	xx	
10,000	xx	xx	
15,000	xx	xx	
20,000	xx	xx	
25,000	xx		
30,000	xx		
40,000	xx		
50,000	xx		
75,000	xx		
100,000	xx		

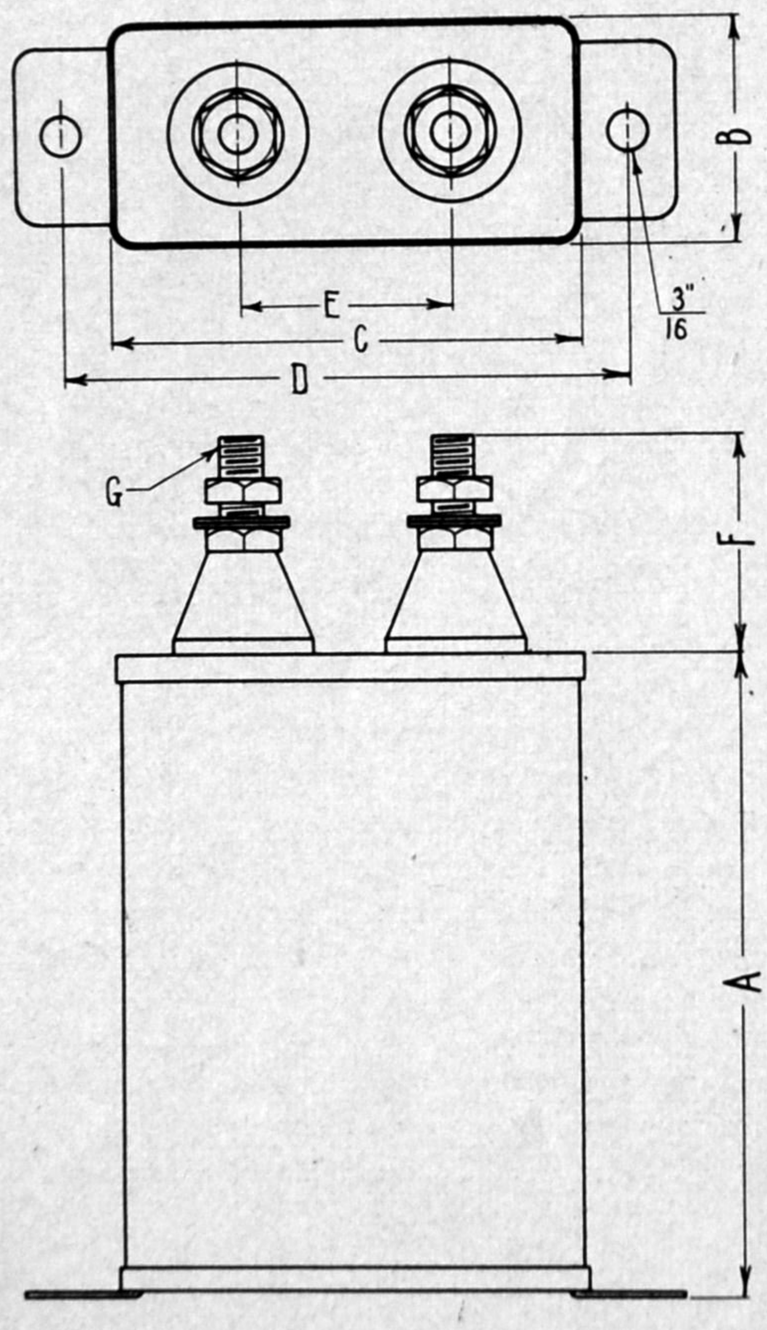

1-G-2 PYRANOL TRANSMITTING CONDENSERS

GENERAL ELECTRIC CO., Schenectady, N. Y.

No. 9CE transmitting condensers are filled and treated with Pyranol, a non-inflammable, non-explosive liquid. The lacquer-finished cases are hermetically sealed, so that leakage, seepage, or contamination from air and moisture are impossible. Pyranol condensers are designed for continuous use up to 10% beyond their rated voltages, and at temperatures up to 75° C. Porcelain bushings are supplied on all models. The condensers can be mounted in any position.

Standard Values and D.C. Working Voltages

CAP.	A	B	C	D	E	F	G	Wt.
600 VOLTS D.C.								
1	2 1/8"	1"	1 3/4"	2 1/4"	13/16"	15/32"	12–28	1/3
2	2 7/8"	1"	1 3/4"	2 1/4"	13/16"	15/32"	12–28	3/8
4	3 3/8"	1 3/16"	2 1/2"	3"	1 1/8"	15/32"	12–28	3/4
1000 VOLTS D.C.								
1	2 3/8"	1"	1 3/4"	2 1/4"	13/16"	15/32"	12–28	7/16
2	4"	1"	1 3/4"	2 1/4"	13/16"	15/32"	12–28	1/2
4	4 3/4"	1 3/16"	2 1/2"	3"	1 1/8"	15/32"	12–28	1
5	4"	1 1/4"	3 3/4"	4 3/8"	2"	15/32"	12–28	1 1/4
10	4 3/4"	1 3/4"	3 3/4"	4 3/8"	2"	15/32"	12–28	2
1500 VOLTS D.C.								
1	4"	1"	1 3/4"	2 1/4"	13/16"	15/32"	12–28	1/2
2	4 1/4"	1 3/16"	2 1/2"	3"	1 1/8"	15/32"	12–28	7/8
4	4 3/4"	1 1/4"	3 3/4"	4 3/8"	2"	15/32"	12–28	1 1/2
5	4 1/4"	1 3/4"	3 3/4"	4 3/8"	2"	15/32"	12–28	1 7/8
10	4 3/4"	3 3/16"	3 3/4"	4 3/8"	2"	15/32"	12–28	3 1/2
2000 VOLTS D.C.								
1	3 3/8"	1 3/16"	2 1/2"	3"	1 1/8"	15/32"	12–28	3/4
2	4"	1 1/4"	3 3/4"	4 3/8"	2"	15/32"	12–28	1 3/8
4	4"	2 1/4"	3 3/4"	4 3/8"	2"	15/32"	12–28	2 1/8
5	4 3/4"	2 1/4"	3 3/4"	4 3/8"	2"	15/32"	12–28	2 1/2
10	4 3/4"	4 9/16"	3 3/4"	4 3/8"*	2"	15/32"	12–28	5
2500 VOLTS D.C.								
1	3 1/4"	1 3/4"	3 3/4"	4 3/8"	2"	15/32"	12–28	1 1/3
2	4 3/4"	1 3/4"	3 3/4"	4 3/8"	2"	15/32"	12–28	2
4	4"	4 9/16"	3 3/4"	4 3/8"*	2"	15/32"	12–28	4
3000 VOLTS D.C.								
1	4"	2 1/4"	3 3/4"	4 3/8"	2"	2"	5/16"–18	2 5/8
2	4 1/4"	3 3/16"	3 3/4"	4 3/8"	2"	2"	5/16"–18	3 1/2
4	5"	4 9/16"	3 3/4"	4 3/8"*	2"	2"	5/16"–18	5 1/2
4000 VOLTS D.C.								
.5	4"	2 1/4"	3 3/4"	4 3/8"	2"	2"	5/16"–18	2 5/8
1	5"	2 1/4"	3 3/4"	4 3/8"	2"	2"	5/16"–18	3 1/2
2	5"	4 9/16"	3 3/4"	4 3/8"*	2"	2"	5/16"–18	5 3/4
5000 VOLTS D.C.								
.5	4 1/4"	2 1/4"	3 3/4"	4 3/8"	2"	2"	5/16"–18	2 3/4
1	4 1/4"	4 9/16"	3 3/4"	4 3/8"*	2"	2"	5/16"–18	4 3/4
2	6"	4 9/16"	3 3/4"	4 3/8"*	2"	2"	5/16"–18	6 3/4

* 4 mounting holes — 3 3/8" center to center on 4 9/16" dimension.

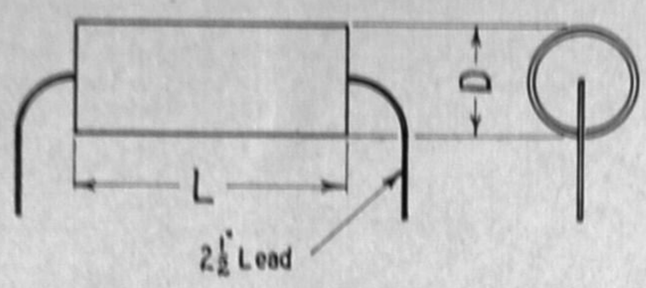

1-H-1 ROLLED PAPER CONDENSERS
AEROVOX CORP., Brooklyn, N. Y.

These condensers, listed in the table below, are wound non-inductively, and are sealed in wax-impregnated paper tubes. They are light enough to be supported by the wiring, although some designers prefer to mount them on terminal strips.

Capacities, Dimensions, and A.C. Working Voltages

	No. 284 125 v.		No. 484 250 v.		No. 684 350 v.		No. 1084 600 v.	
CAP.	L.	D.	L.	D.	L.	D.	L.	D.
.006	13/16"	3/8"	13/16"	3/8"	1¼"	7/16"	1½"	½"
.01	13/16"	3/8"	1¼"	7/16"	1½"	7/16"	1½"	9/16"
.015	1¼"	7/16"	1¼"	7/16"	1½"	7/16"	1½"	9/16"
.02	1¼"	7/16"	1¼"	½"	1½"	½"	1½"	5/8"
.03	1¼"	7/16"	1½"	½"	1½"	9/16"	2"	5/8"
.05	1⅜"	½"	1½"	9/16"	2"	9/16"	2"	¾"
.1	1½"	9/16"	2"	9/16"	2"	¾"		
.25	2"	5/8"	2"	13/16"	2"	1"		
.5	2"	13/16"	2"	15/16"	2"	15/16"		
.006–.006	1½"	7/16"	1½"	7/16"				
.01–.01	1½"	7/16"	1½"	½"				
.02–.02	1½"	½"	2"	9/16"				
.03–.03	1½"	½"	2"	9/16"				
.05–.05	1½"	5/8"	2"	9/16"				
.1–.1	2"	5/8"	2"	¾"				
.25–.25	2"	15/16"						

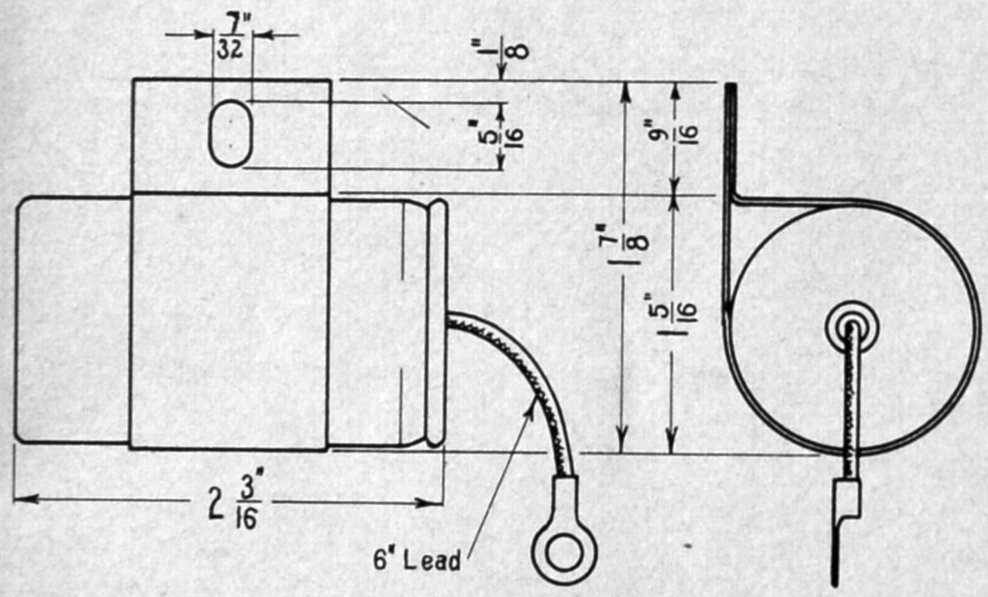

1-H-2 SPARK SUPPRESSOR CONDENSERS
AEROVOX CORP., Brooklyn, N. Y.

No. 1120, illustrated above, is non-inductively wound and sealed in a drawn shell designed to permit operation in temperatures up to 160 degrees F. The capacity is 1 mf. A similar type, No. 1140, not illustrated, has a capacity of .5 mf., and is 2 ins. long by 21/32 in. diameter. Both are rated at 150 volts D.C. working voltage.

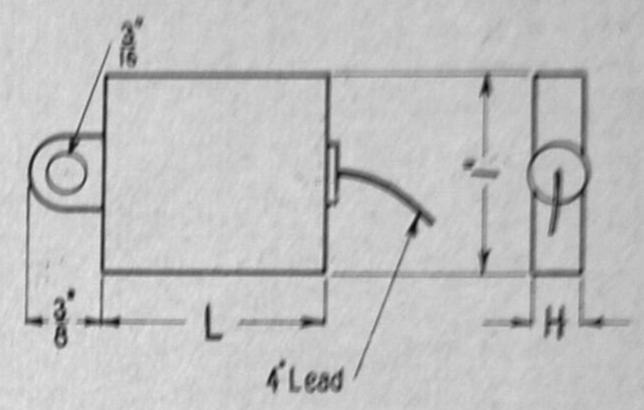

1-H-3 AUTOMOBILE VIBRATOR CONDENSERS
AEROVOX CORP., Brooklyn, N. Y.

No. 1130 series are vibrator condensers for automobile radio B supplies. They are oil-filled and sealed in soldered steel cases, to protect them against the severest conditions of heat, vibration, and moisture.

Standard Values and Dimensions

CAP.	L.	H.	CAP.	L.	H.
.007	7/8"	9/32"	.04	1⅛"	9/32"
.01	7/8"	9/32"	.05	1⅛"	9/32"
.02	7/8"	9/32"	.06	1⅛"	13/32"
.03	1⅛"	9/32"	.07	1⅛"	13/32"

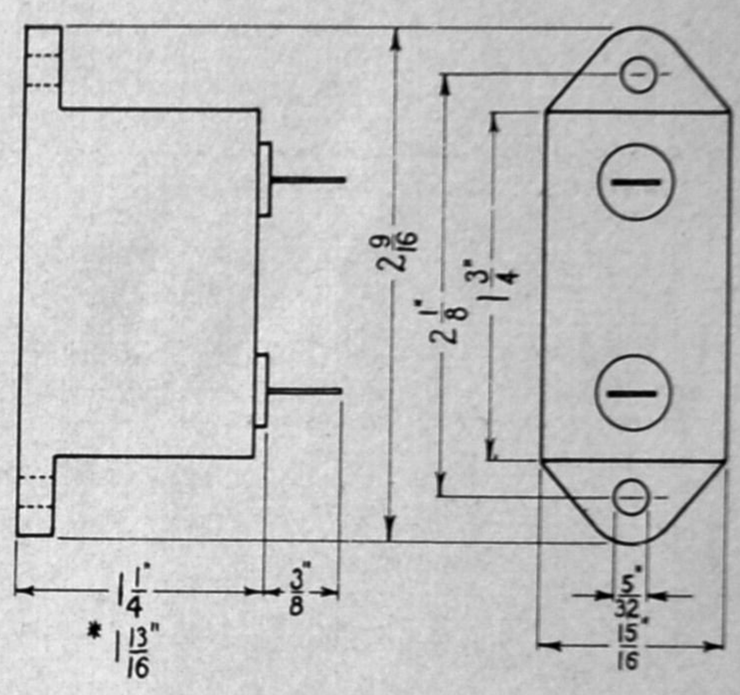

1-H-4 PAPER CONDENSERS IN BAKELITE CASES
AEROVOX CORP., Brooklyn, N. Y.

These condensers, as listed below, are intended particularly for laboratory equipment and commercial apparatus where appearance, as well as efficiency, is a factor. They are wound non-inductively.

Standard Values and A.C. Working Voltages

CAP.	No. 250 125 v.	No. 450 250 v.	No. 650 350 v.	No. 1051 600 v.
.05	xx	xx	xx	xx
.1	xx	xx	xx	xx*
.25	xx	xx		
.5	xx	xx*		
1.	xx*			

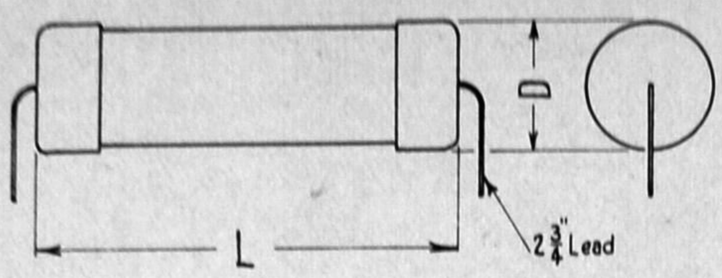

1-I-1 DRY ELECTROLYTIC CARTRIDGE CONDENSERS
AEROVOX CORP., Brooklyn, N. Y.

NO. PR series condensers are used widely in broadcast receivers where low cost and adaptability are vital factors. Mounted in impregnated cardboard tubes, they furnish high capacities with a minimum of weight and space. They are entirely dry, and free from leakage, seepage, and corrosion. There is no ill effect from ranges of temperature encountered under all operating conditions of broadcast receivers. Capacities, dimensions, and D.C. working voltages are given in the table opposite.

Capacities, Dimensions and D.C. Working Voltages

No. PR25	25 v.		No. PR100	100 v.	
CAP.	L.	D.	CAP.	L.	D.
5	2¼″	⅝″	5	2¼″	⅞″
10	2¼″	⅝″	10	2¾″	1⅛″
16	2¼″	⅞″	16	2¾″	1¼″
20	2¼″	⅞″	20	2¾″	1¼″
25	2¼″	⅞″	25	2¾″	1¼″
50	2¾″	1⅛″			
No. PR50	**50 v.**		**No. PR150**	**150 v.**	
5	2¼″	⅝″	4	2¼″	⅞″
10	2¼″	⅞″	6	2¼″	⅞″
16	2¾″	1⅛″	8	2¾″	1⅛″
20	2¾″	1⅛″			
25	2¾″	1⅛″	**No. PR2**	**200 v.**	
50	2¾″	1¼″	5	2¾″	1¼″

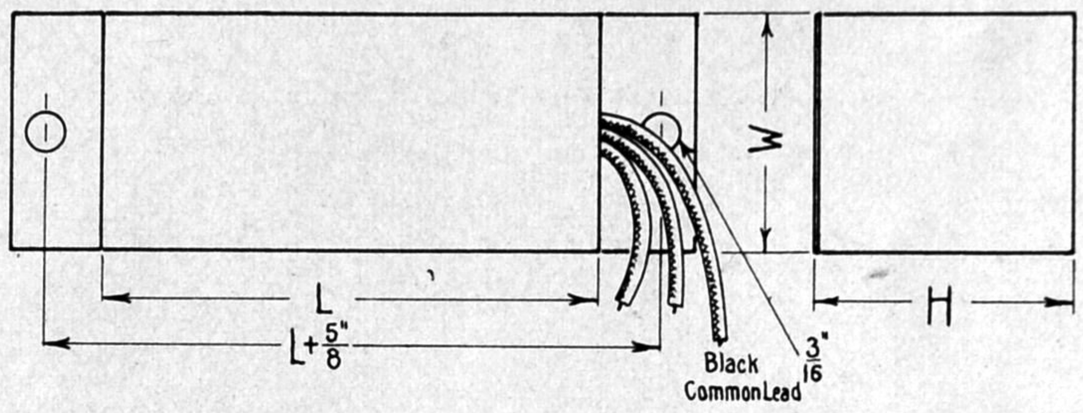

1-I-2 DRY ELECTROLYTIC CONDENSERS
AEROVOX CORP., Brooklyn, N. Y.

NO. PB series condensers, mounted in impregnated cardboard cases, are similar to the PR series listed above in their general specifications. The important difference is that mounting holes are provided on the base strip. Seven types of two-section condensers are listed in the accompanying table. Note that the condensers are rated according to D.C. working voltages.

Capacities, Dimensions, and D.C. Working Voltages

CAP.	L.	W.	H.	CAP.	L.	W.	H.	CAP.	L.	W.	H.
No. PB-25	**25 v.**			**No. PB-150**	**150 v.**			4–4	2⅝″	1⅜″	1¼″
5	2⅜″	1 1/16″	1 1/16″	4	2⅜″	1 1/16″	1 1/16″	4–8	2⅝″	1⅜″	1¼″
10	2⅜″	1 1/16″	1 1/16″	6	2⅜″	1 1/16″	1 1/16″	8–8	2⅝″	1⅜″	1¼″
25	2⅜″	1 1/16″	1 1/16″	8	2⅜″	1 1/16″	1 1/16″	8–16	4⅛″	1 9/16″	1⅛″
								16–16	4⅛″	1 9/16″	1⅛″
No. PB-50	**50 v.**			**No. PB-2**	**200 v.**			**No. PB-3**	**300 v.**		
5	2⅜″	1 1/16″	1 1/16″	1	2⅜″	1 1/16″	1 1/16″	2	2⅜″	1 1/16″	1 1/16″
10	2⅜″	1 1/16″	1 1/16″	2	2⅜″	1 1/16″	1 1/16″	4	2⅜″	1 1/16″	1 1/16″
25	2⅜″	1⅜″	1¼″	3	2⅜″	1 1/16″	1 1/16″	6	2⅝″	1⅜″	1¼″
				4	2⅜″	1 1/16″	1 1/16″	8	2⅝″	1⅜″	1¼″
No. PB-100	**100 v.**			6	2⅜″	1 1/16″	1 1/16″	4–8	4⅛″	1⅜″	15/16″
5	2⅜″	1 1/16″	1 1/16″		2⅜″	1 1/16″	1 1/16″	8–8	4⅛″	1 9/16″	1⅛″
10	2⅜″	1 1/16″	1 1/16″								

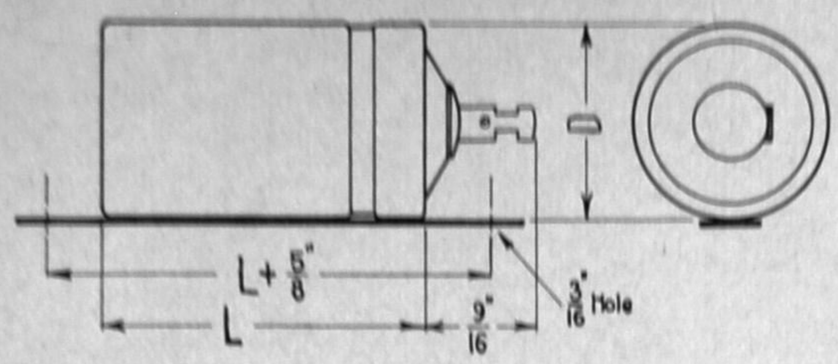

1-J-1 ELECTROLYTIC BY-PASS CONDENSERS
AEROVOX CORP., Brooklyn, N. Y.

This series of strap-mounted electrolytic condensers includes single and double units for by-passing in all kinds of receiver circuits. The can is the negative terminal. The positive terminal, or terminals, are carried on a Bakelite bushing. Since the cans are sealed, they can be mounted in any position without danger of leakage or seepage. Note that they are rated according to their D.C. working voltage. Condensers of this type occupy a smaller volume of space and weigh substantially less than rolled paper condensers of equivalent capacity and voltage ratings.

Capacities, Dimensions, and D.C. Working Voltages

CAP.	L.	D.	CAP.	L.	D.
No. MM25 25 v.			16	2 5/8"	1"
5	1 5/8"	1"	20	2 5/8"	1"
10	1 5/8"	1"	25	3 1/8"	1"
16	1 5/8"	1"	4–4	1 5/8"	1"
20	1 5/8"	1"	8–8	2 5/8"	1"
25	1 5/8"	1"	No. MM150 150 v.		
5–5	1 5/8"	1"	4	1 5/8"	1"
10–10	1 5/8"	1"	6	1 5/8"	1"
No. MM50 50 v.			8	2 5/8"	1"
5	1 5/8"	1"	No. MM2 200 v.		
10	1 5/8"	1"	2	1 5/8"	1"
16	1 5/8"	1"	4	1 5/8"	1"
20	2 5/8"	1"	5	2 5/8"	1"
25	2 5/8"	1"	8	2 5/8"	1"
5–5	1 5/8"	1"	No. MM3 300 v.		
10–10	2 5/8"	1"	2	1 5/8"	1"
No. MM100 100 v.			4	2 5/8"	1"
5	1 5/8"	1"	6	2 5/8"	1"
10	1 5/8"	1"	8	3 1/8"	1"

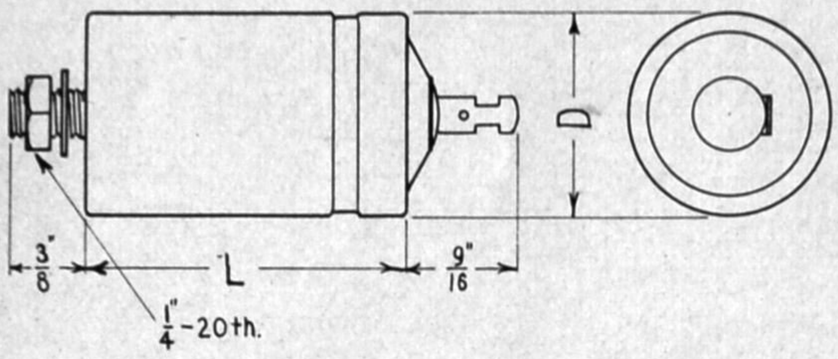

1-J-2 ELECTROLYTIC BY-PASS CONDENSERS
AEROVOX CORP., Brooklyn, N. Y.

Frequently, considerable space can be saved by using the end-mounted SM type of electrolytic condensers, instead of the MM series. Since they are hermetically sealed, they can be mounted at any angle. A 1/4-in. hole is required for the 1/4–20 mounting stud. This stud, which is electrically connected to the can, is the negative terminal. Capacities range up to 25. mf. in the 25-volt size, and up to 8. mf. in the 300-volt size. All these electrolytic condensers are able to withstand the very low temperatures which may be encountered in transit, as well as the high temperatures which may develop in midget receivers.

Capacities, Dimensions, and D.C. Working Voltages

CAP.	L.	D.	CAP.	L.	D.
No. SM25 25 v.			20	2 5/8"	1"
5	1 5/8"	1"	25	3 1/8"	1"
10	1 5/8"	1"	No. SM150 150 v.		
16	1 5/8"	1"	4	1 5/8"	1"
20	1 5/8"	1"	6	1 5/8"	1"
25	1 5/8"	1"	8	2 5/8"	1"
No. SM50 50 v.			No. SM3 200 v.		
5	1 5/8"	1"	2	1 5/8"	1"
10	1 5/8"	1"	4	1 5/8"	1"
16	1 5/8"	1"	5	2 5/8"	1"
20	2 5/8"	1"	8	2 5/8"	1"
25	2 5/8"	1"	No. SM3 300 v.		
No. SM100 100 v.			2	1 5/8"	1"
5	1 5/8"	1"	4	2 5/8"	1"
10	1 5/8"	1"	6	2 5/8"	1"
16	2 5/8"	1"	8	3 1/8"	1"

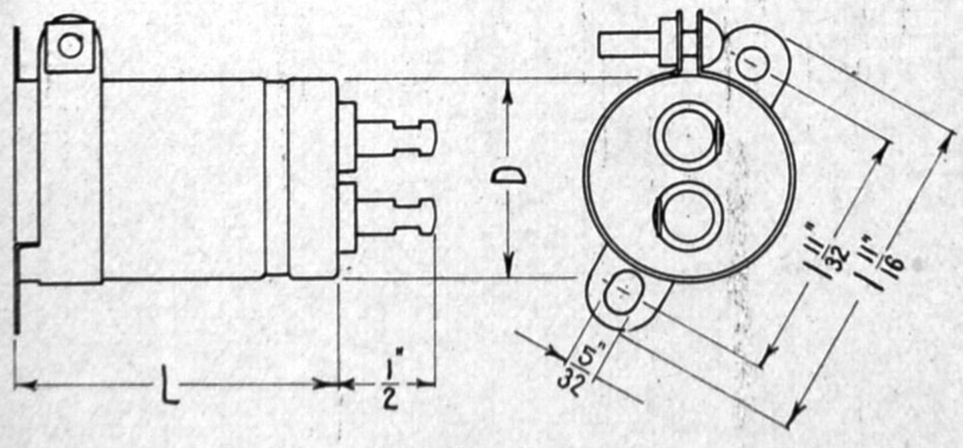

1-J-3 DUAL-SECTION ELECTROLYTIC CONDENSERS
AEROVOX CORP., Brooklyn, N. Y.

The ring-type mounting for this series of electrolytic condensers permits them to be mounted above or below the chassis, or when design conditions make it necessary, extending part way thru a hole in the chassis. The can is the negative terminal. The general design and characteristics are similar to the MM and SM series. All the EEM series, however, are dual-section condensers, with the positive terminals mounted on molded Bakelite bushings.

Capacities, Dimensions, and D.C. Working Voltages

CAP.	L.	D.	Cap.	L.	D.
No. EEM25 25 v.			8–8	3 1/8"	1"
5–5	1 5/8"	1"	No. EEM2 200 v.		
10–10	1 5/8"	1"	4–4	2 5/8"	1"
No. EEM50 50 v.			4–8	2 5/8"	1"
5–5	1 5/8"	1"	8–8	3 1/8"	1"
10–10	2 5/8"	1"	No. EEM250 250 v.		
No. EEM100 100 v.			4–4	2 5/8"	1"
4–4	1 5/8"	1"	4–8	4 3/8"	1"
8–8	2 5/8"	1"	No. EEM3 300 v.		
No. EEM150 150 v.			4–4	3 1/8"	1"
4–4	2 5/8"	1"	4–8	4 3/8"	1"

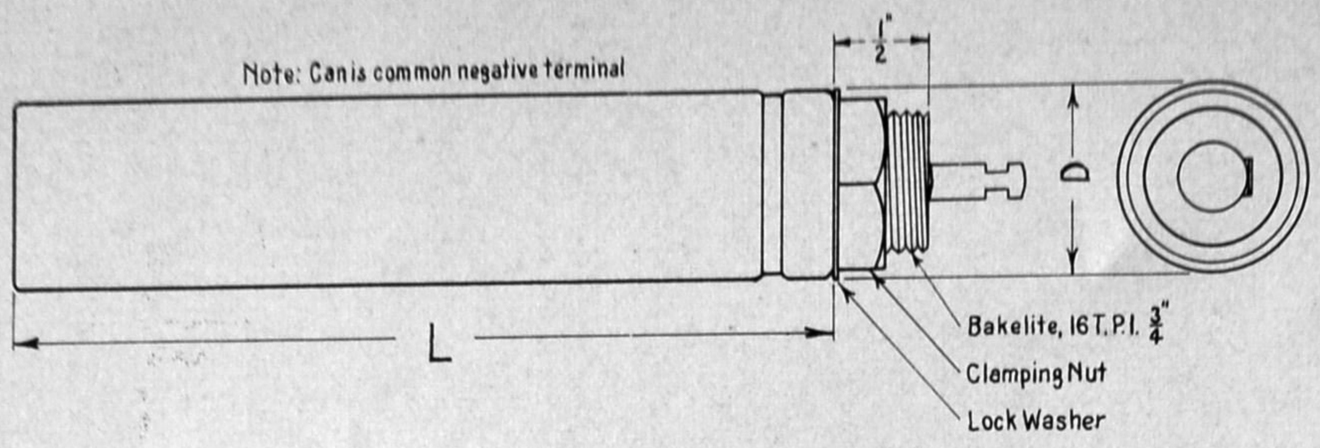

Capacities and Dimensions
Type GM5 450 D.C. Work.

CAP.	L.	D.
2	2 5/8"	1"
4	2 5/8"	1"
6	4 3/8"	1"
8	4 3/8"	1"

1-J-4 ELECTROLYTIC FILTER CONDENSERS
AEROVOX CORP., Brooklyn, N. Y.

No. GM series of electrolytic condensers, contained in cans 1 in. in diameter, are for inverted mounting, altho they are operable in any position. A 3/4-in. hole is required for the threaded Bakelite bushing which carries the positive terminal. The can is negative, and is grounded to the chassis. However, an insulating bushing can be supplied if it is not desirable to ground the can to the chassis.

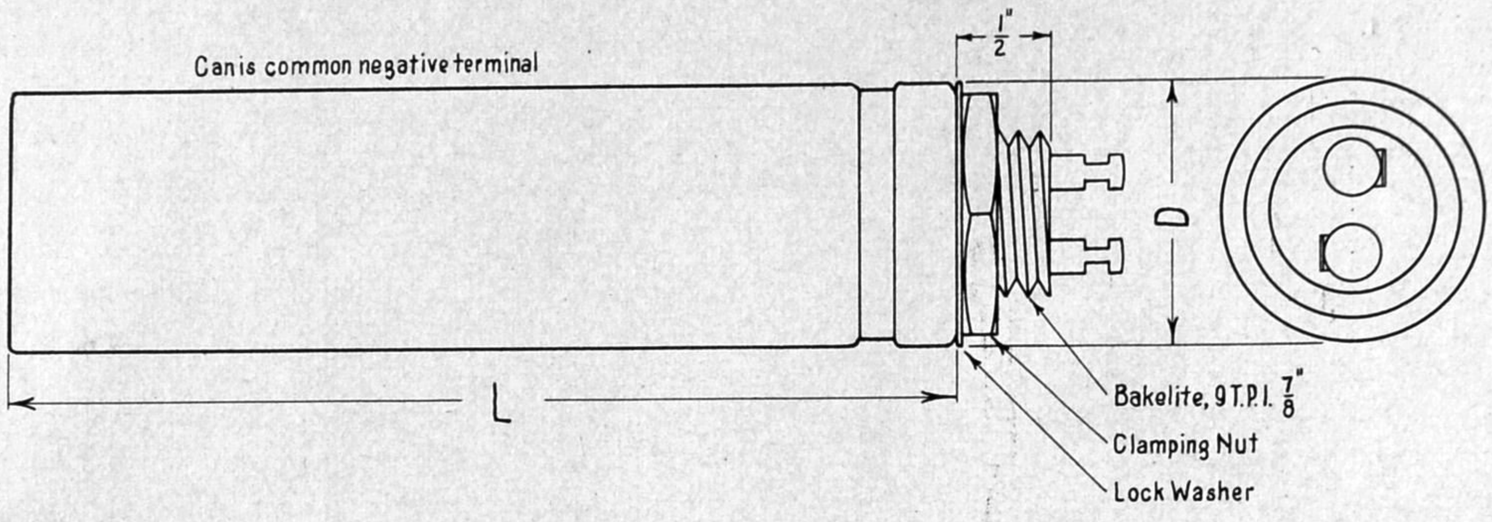

1-J-5 DUAL ELECTROLYTIC FILTER CONDENSERS
AEROVOX CORP., Brooklyn, N. Y.

No. GG series is similar to GM, except that the cans are 1 3/8 ins. in diameter, and contain two condenser sections. The can is the common negative terminal. These condensers require a 7/8-in. hole for mounting. A special negative terminal and insulating washer is available for use when it is not desirable to ground the can. The wide range of capacity combinations has been chosen to meet the varied requirements for filter circuits and by-passing.

Capacities, Dimensions, and D.C. Working Voltages

CAP.	L.	D.
No. GG25	25 v.	
5–5	1 3/4"	1 3/8"
10–10	1 3/4"	1 3/8"
No. GG50	50 v.	
5–5	1 3/4"	1 3/8"
10–10	1 3/4"	1 3/8"
No. GG100	100 v.	
4–4	1 3/4"	1 3/8"
8–8	1 3/4"	1 3/8"
No. GG150	150 v.	
4–4	1 3/4"	1 3/8"
8–8	1 3/4"	1 3/8"
No. GG2	200 v.	
4–4	1 3/4"	1 3/8"
8–8	2 5/8"	1 3/8"
16–16	3 1/8"	1 3/8"
Insulating washer and ground terminal can be supplied for these condensers		
No. GG250	250 v.	
4–4	2 5/8"	1 3/8"
8–8	2 5/8"	1 3/8"
No. GG3	300v.	
4–4	2 5/8"	1 3/8"
8–8	3 1/8"	1 3/8"
No. GG350	350 v.	
4–4	3 1/8"	1 3/8"
8–8	4 5/8"	1 3/8"
No. GG5	500 v.	
2–8	4 1/8"	1 3/8"
4–4	3 1/8"	1 3/8"
4–8	4 1/8"	1 3/8"
4–10	4 5/8"	1 3/8"
6–6	4 1/8"	1 3/8"
6–8	4 5/8"	1 3/8"
6–12	5"	1 3/8"
8–8	5"	1 3/8"

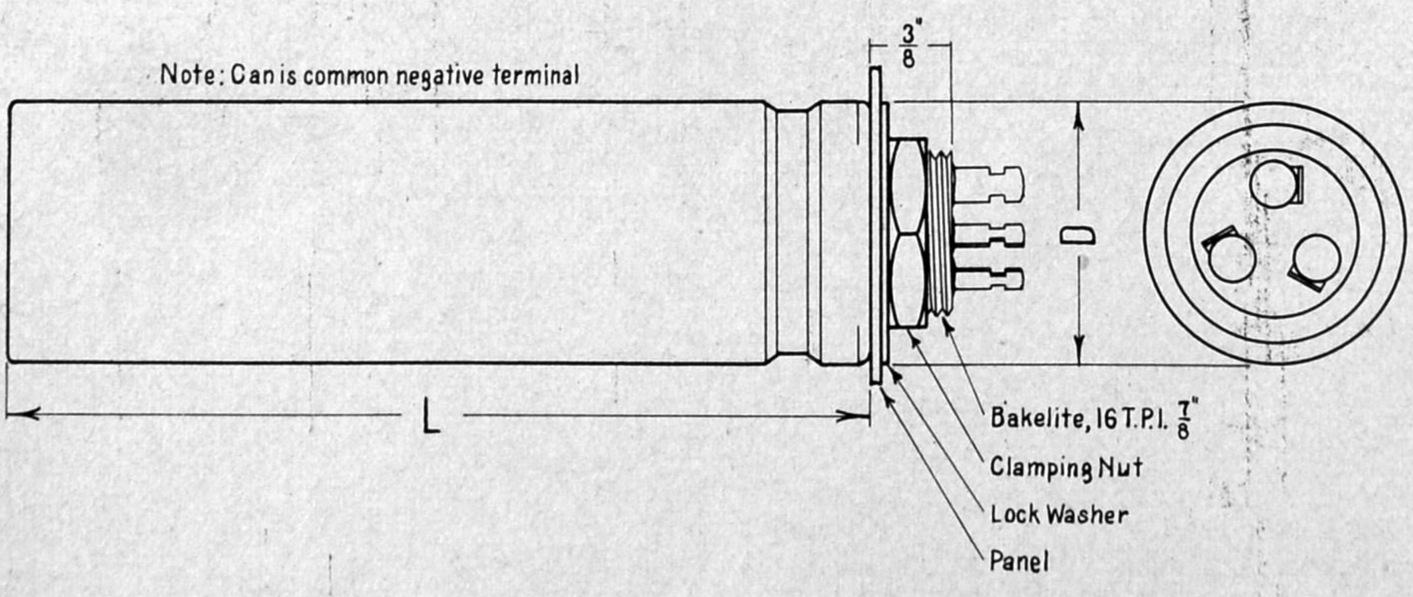

1-J-6 TRIPLE ELECTROLYTIC FILTER CONDENSERS
AEROVOX CORP., Brooklyn, N. Y.

No. GGG series condensers are similar to GM and GG, except that they are all triple units of 4-4-4 and 8-8-8 mfd. A 7/8-in. mounting hole is required. The can, which is the common negative terminal, can be insulated from the chassis by a special insulating washer.

Capacities, Demensions and D. C. Working Voltages

CAP.	L.	D.
No. GGG100	100 v.	
4–4–4	1 3/4"	1 3/8"
8–8–8	1 3/4"	1 3/8"
No. GGG150	150 v.	
4–4–4	1 3/4"	1 3/8"
8–8–8	2 5/8"	1 3/8"
No. GGG2	200 v.	
4–4–4	2 5/8"	1 3/8"
8–8–8	2 5/8"	1 3/8"
No. GGG250	250 v.	
4–4–4	2 5/8"	1 3/8"
8–8–8	4 1/8"	1 3/8"
No. GGG3	300 v.	
4–4–4	2 5/8"	1 3/8"
No. GGG350	350 v.	
4–4–4	4 1/8"	1 3/8"
No. GGG5	450 v.	
4–4–4	4 5/8"	1 3/8"

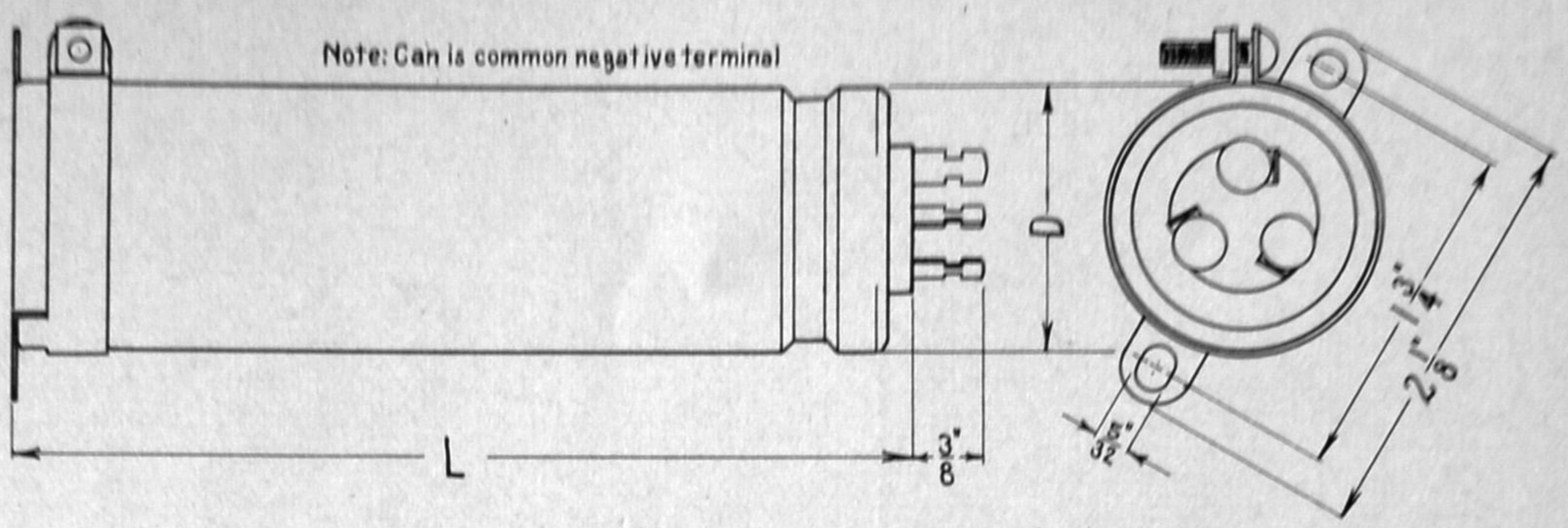

1-J-7 TRIPLE ELECTROLYTIC FILTER CONDENSERS

AEROVOX CORP., Brooklyn, N. Y.

No. EE and EEE series electrolytic condensers are similar to the EM series, except that they are contained in 1⅜-in. cans, and have double and triple sections, respectively. The accompanying table gives the capacities, dimensions, and D.C. working voltages for both series. The can, which is the common negative terminal, is grounded through the mounting ring.

Capacities, Dimensions, and D.C. Working Voltages

CAP.	L.	D.
No. EE25 25 v.		
5–5	1¾″	1⅜″
10–10	1¾″	1⅜″
No. EE50 25 v.		
5–5	1¾″	1⅜″
10–10	1¾″	1⅜″
No. EE100 100 v.		
4–4	1¾″	1⅜″
8–8	1¾″	1⅜″
No. EE150 150 v.		
8–8	1¾″	1⅜″
No. EE2 200 v.		
4–4	1¾″	1⅜″
8–8	2⅝″	1⅜″
16–16	3⅛″	1⅜″
No. EE3 300 v.		
4–4	2⅝″	1⅜″
8–8	3⅛″	1⅜″
No. EE350 350 v.		
4–4	3⅛″	1⅜″
8–8	4⅝″	1⅜″
No. EE5 450 v.		
2–8	4⅛″	1⅜″
4–4	3⅛″	1⅜″
4–8	4⅛″	1⅜″
6–6	4⅛″	1⅜″
6–8	4⅝″	1⅜″
6–12	5″	1⅜″
8–8	5″	1⅜″
No. EEE100 100 v.		
4–4–4	1¾″	1⅜″
8–8–8	1¾″	1⅜″
No. EEE150 150 v.		
4–4–4	1¾″	1⅜″
8–8–8	2⅝″	1⅜″
No. EEE2 200 v.		
4–4–4	2⅝″	1⅜″
8–8–8	2⅝″	1⅜″
No. EEE250 250 v.		
4–4–4	2⅝″	1⅜″
8–8–8	4⅛″	1⅜″
No. EEE3 300 v.		
4–4–4	2⅝″	1¾″
No. EEE350 350 v.		
4–4–4	4⅛″	1⅜″
No. EEE5 500 v.		
2–2–2	2⅝″	1⅜″
4–4–4	4⅝″	1⅜″

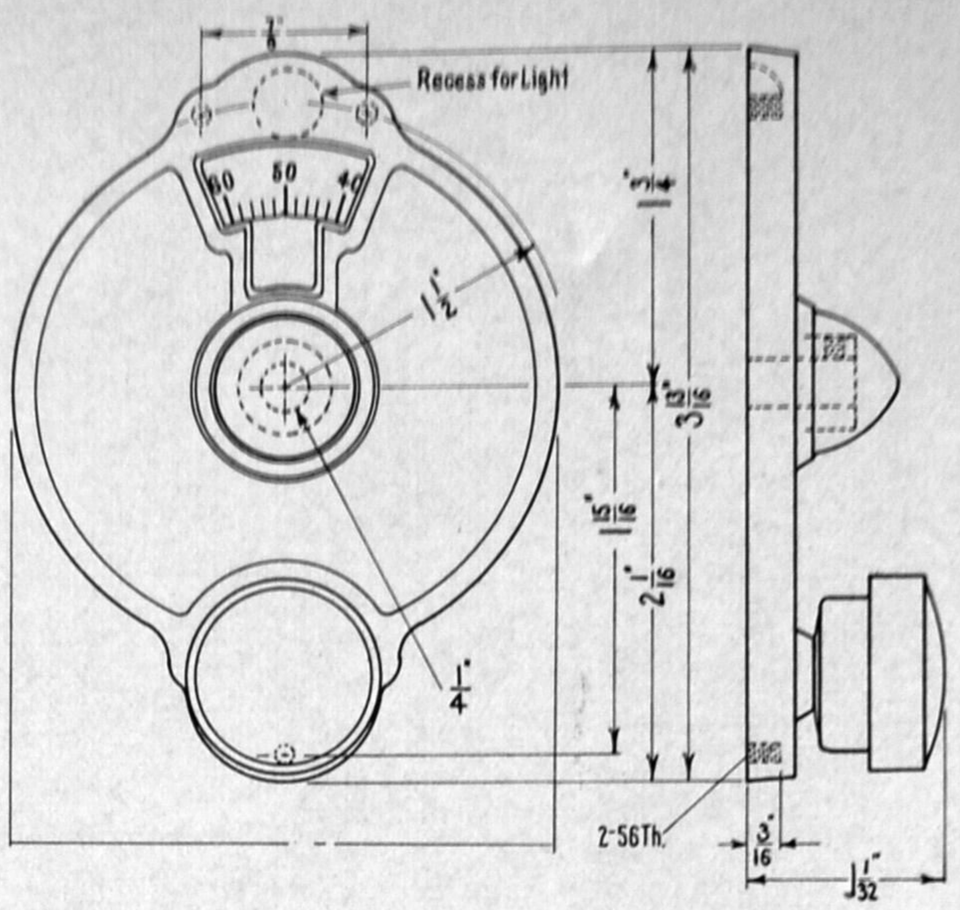

2-A-1 MIDGET BAKELITE DIAL

NATIONAL COMPANY, Malden, Mass.

No. BM is a small Bakelite dial intended to match the B and BX dials in appearance, although it has no variable ratio drive. It is furnished with the following selection of scales:

No. 1	0–100–0 divisions	180° rotation	Either rotation
No. 5	0–200	360°	Counter-clockwise

This dial can be illuminated by mounting a lamp behind the panel, with a hole through which the light can shine into a recess just above the dial-opening. The drive employs a spring-tension, with ample friction surface to assure smooth and positive control, even with a heavy load on the shaft. At the center of the dial is a metal cap which can be pried off readily to get at the set screw for the shaft to be rotated by the dial.

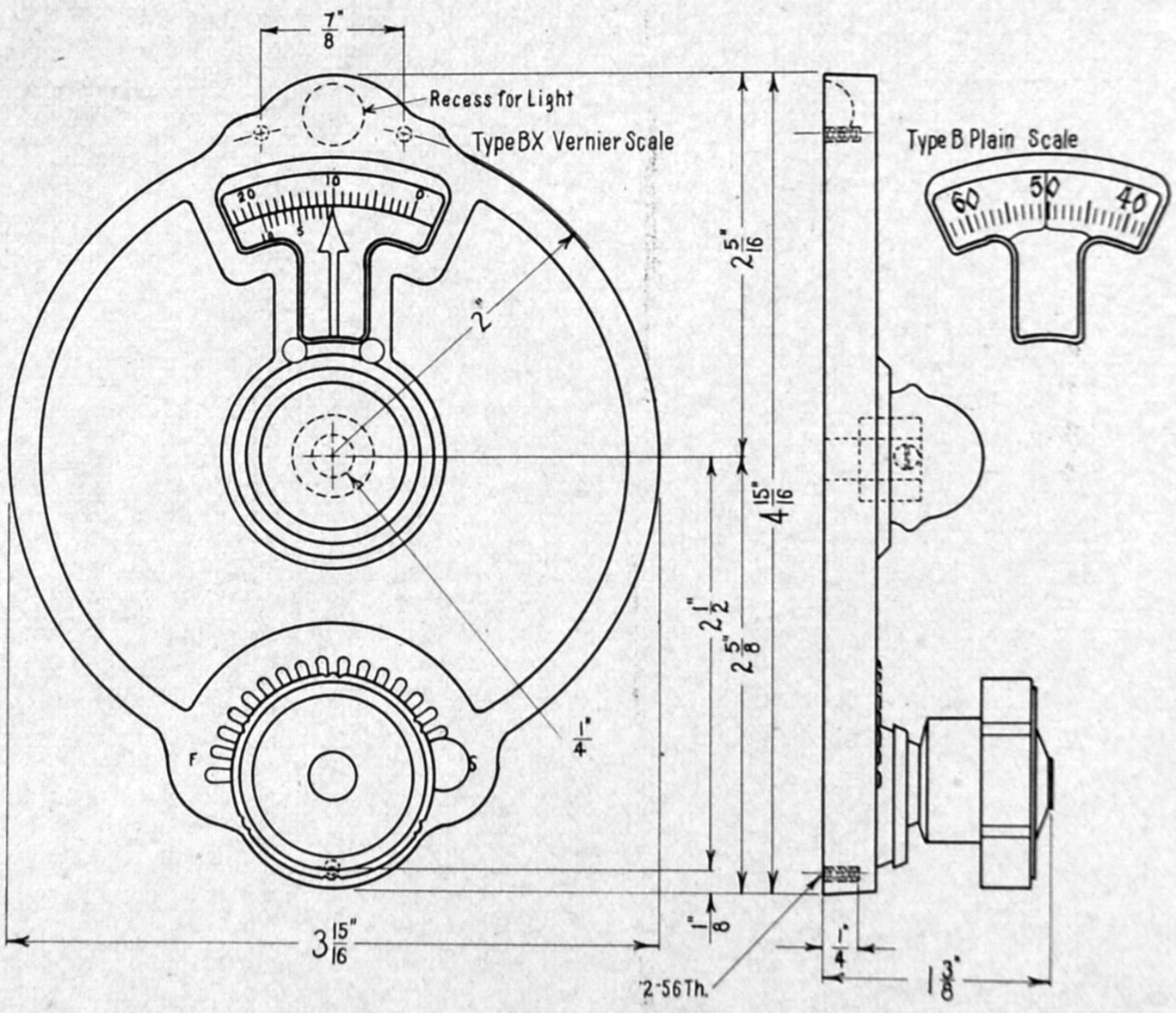

2-A-2 VARIABLE RATIO BAKELITE DIAL

NATIONAL COMPANY, Malden, Mass.

No. BX dial has a vernier scale for reading to 1/10 of a division, while No. B has the plain scale illustrated above. Only one scale is provided for the BX dial:

No. 5	200–0 divisions	360° rotation	Counter-clockwise

No. B dial is provided with either of two scales:

No. 1	0–100–0 divisions	180° rotation	Either direction
No. 5	0–200	360°	Counter-clockwise

A substantial range in drive ratio is obtained by moving the arm under the knob. This swings the knob and the spring-tension friction discs toward or away from the large disc on the shaft bushing. Thus the ratio can be adjusted to the speed desired or the load to be carried. A recess at the rear, above the dial opening, makes it possible to illiminate the scale by a light mounted behind the panel. A corresponding hole must be drilled thru the panel, and the light so mounted, if possible, that the bulb extends into the hole in the panel, so as to provide the best illumination.

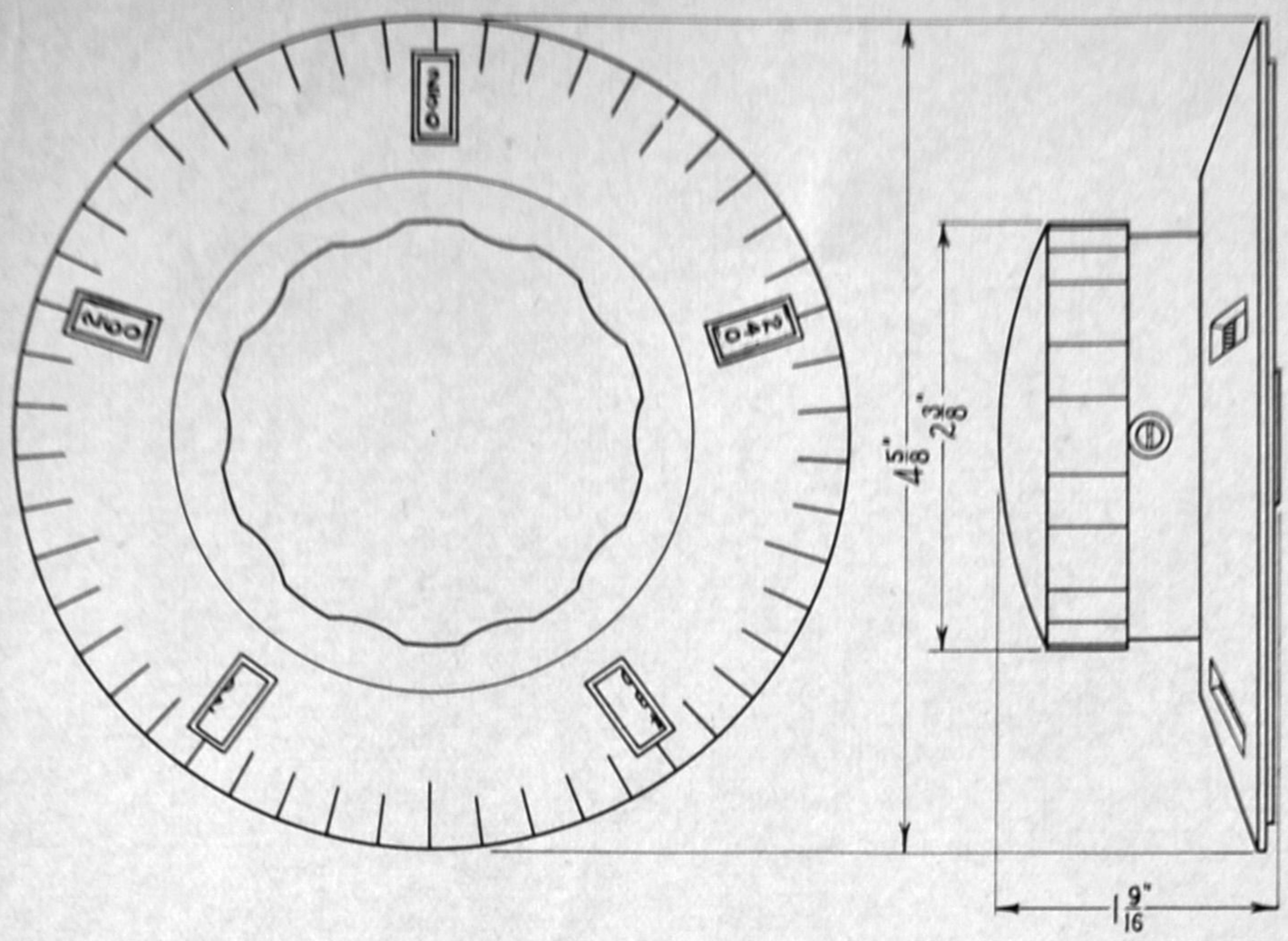

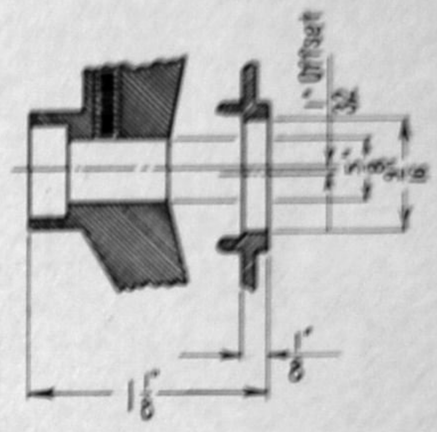

2-A-3 MICROMETER DIAL FOR PRECISION CONDENSER
NATIONAL COMPANY, Malden, Mass.

The Micrometer Dial is most interesting in design and construction. Intended specifically for the precision condensers illustrated at 1-A-4, Second Section, the scale has the effect of 500 divisions in 180° rotation of the condenser shaft, permitting unusually close reading. Actually, the dial has 50 divisions, but it must be rotated 10 times to turn the condenser 180°.

Behind the dial is a disc carrying numbers by tens from 0 to 500. This disc, which fits on the off-set collar of the condenser shaft, is rotated by an internal gear on the dial, in such a way that if the number in the top opening is 250, for example, by the time the dial has been rotated to the left 10 divisions, the number which will appear in the next opening will be 240. Or, if the dial is rotated to the right, the number to appear in the next opening will be 260.

This change results from the ratio between the internal gear on the dial, and the external gear on the number disc. There are no other moving parts, and no additional mechanism. Since the dial is fastened to the shaft of the condenser driving worm, no wear can affect the accuracy of the readings. The "feel" is very light and free.

Readings of the dial are proportionate to frequency increase, increasing as the capacity goes down. There are no parts attached to the panel. The detail drawing above shows the discs and the single set screw, through the knob, which secures the dial to the shaft.

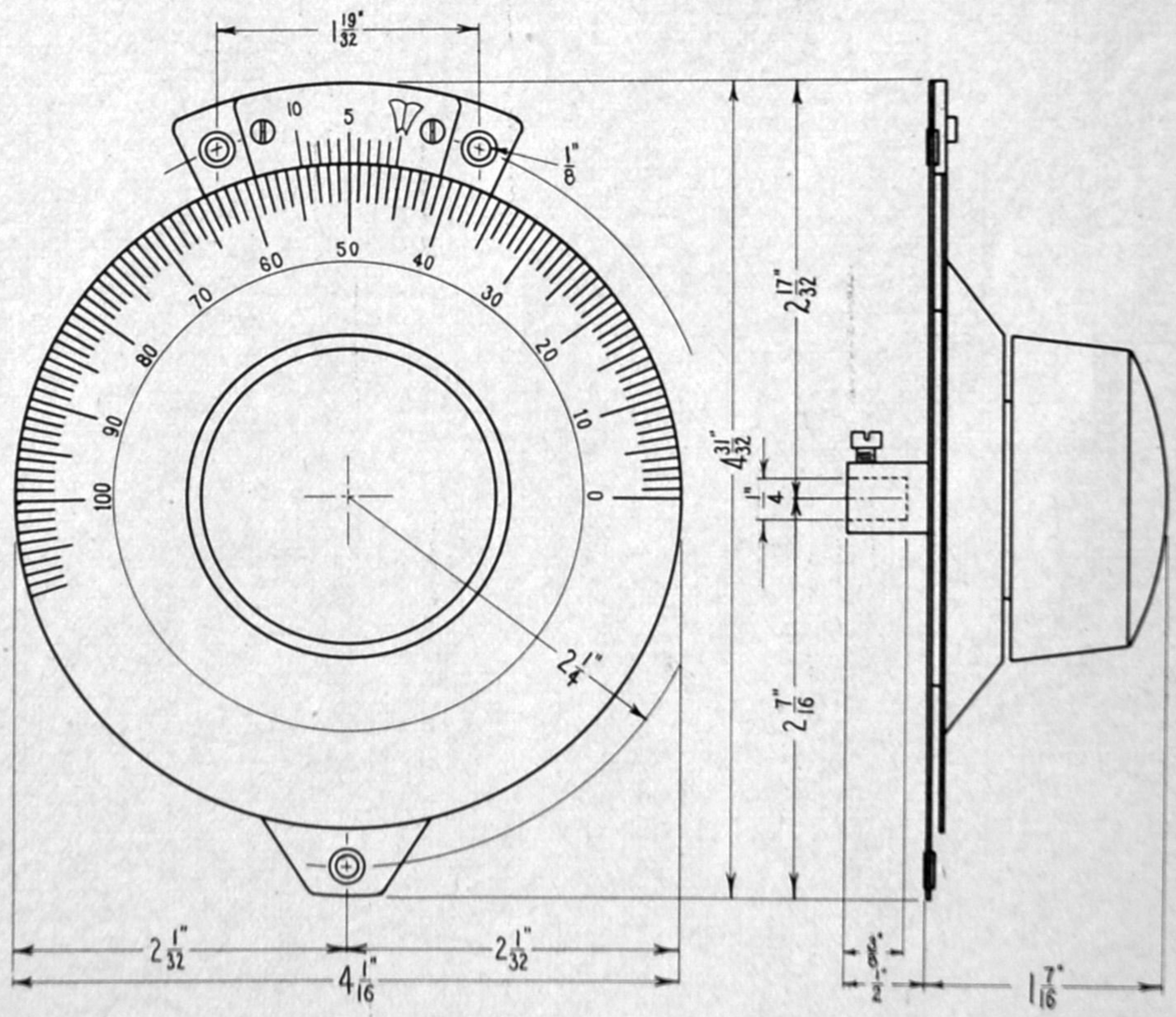

2-A-4 GERMAN SILVER PRECISION DIAL
NATIONAL COMPANY, Malden, Mass.

No. N dial of German silver, has a vernier, reading to 1/10 division, fastened to the mounting plate. The dial is mounted on the panel by three screws, two above the dial and one below. The driving mechanism is of the familiar Velvet Vernier type, 1 to 5 ratio, exceedingly smooth and positive in action. Note that the condenser shaft must be cut off behind the panel to accommodate the collar and set-screw. Scales are available as follows:

No. 2	0–100 divisions	180° rotation	Counter-clockwise
No. 3	100–0	180°	Clockwise
No. 4	0–150	270°	Counter-clockwise
No. 5	0–200	360°	Counter-clockwise

All necessary mounting hardware is furnished with the dial.

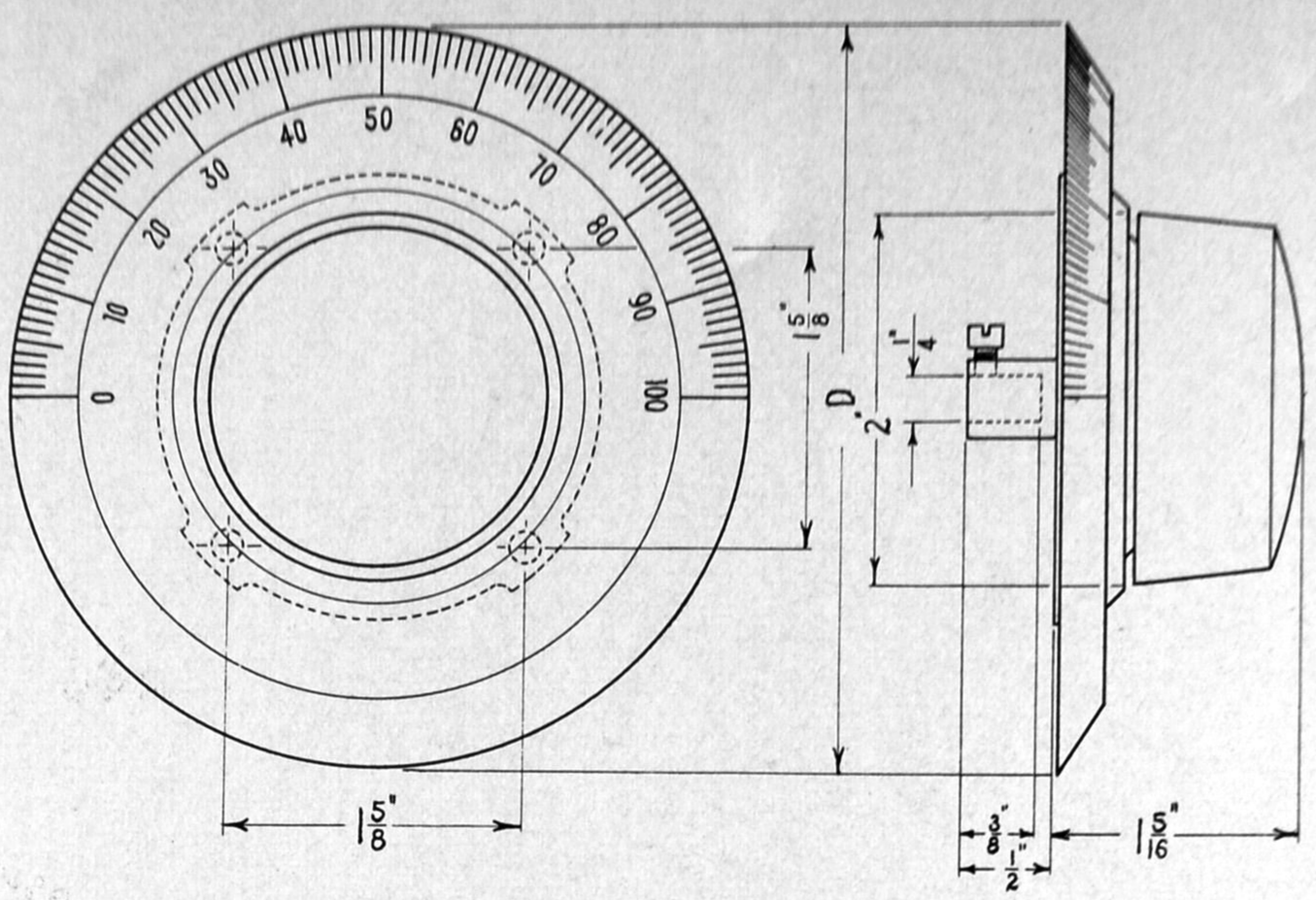

2-A-5 VELVET VERNIER BAKELITE DIAL
NATIONAL COMPANY, Malden, Mass.

No. A is the original Velvet Vernier Bakelite dial which has been so widely used for many years. The 1 to 5 friction drive is the same as that used in the No. N dial. Four screws are required to fasten the mechanism to the panel. Some of the NATIONAL variable condensers have mounting holes so arranged that the screws through the dial mechanism also hold the condenser. Note that the condenser shaft must be cut off behind the panel. The scales available are:

No. 2	0–100 divisions	180° rotation	Counter-clockwise
No. 4	150–0	270°	Counter-clockwise
No. 5	200–0	360°	Counter-clockwise

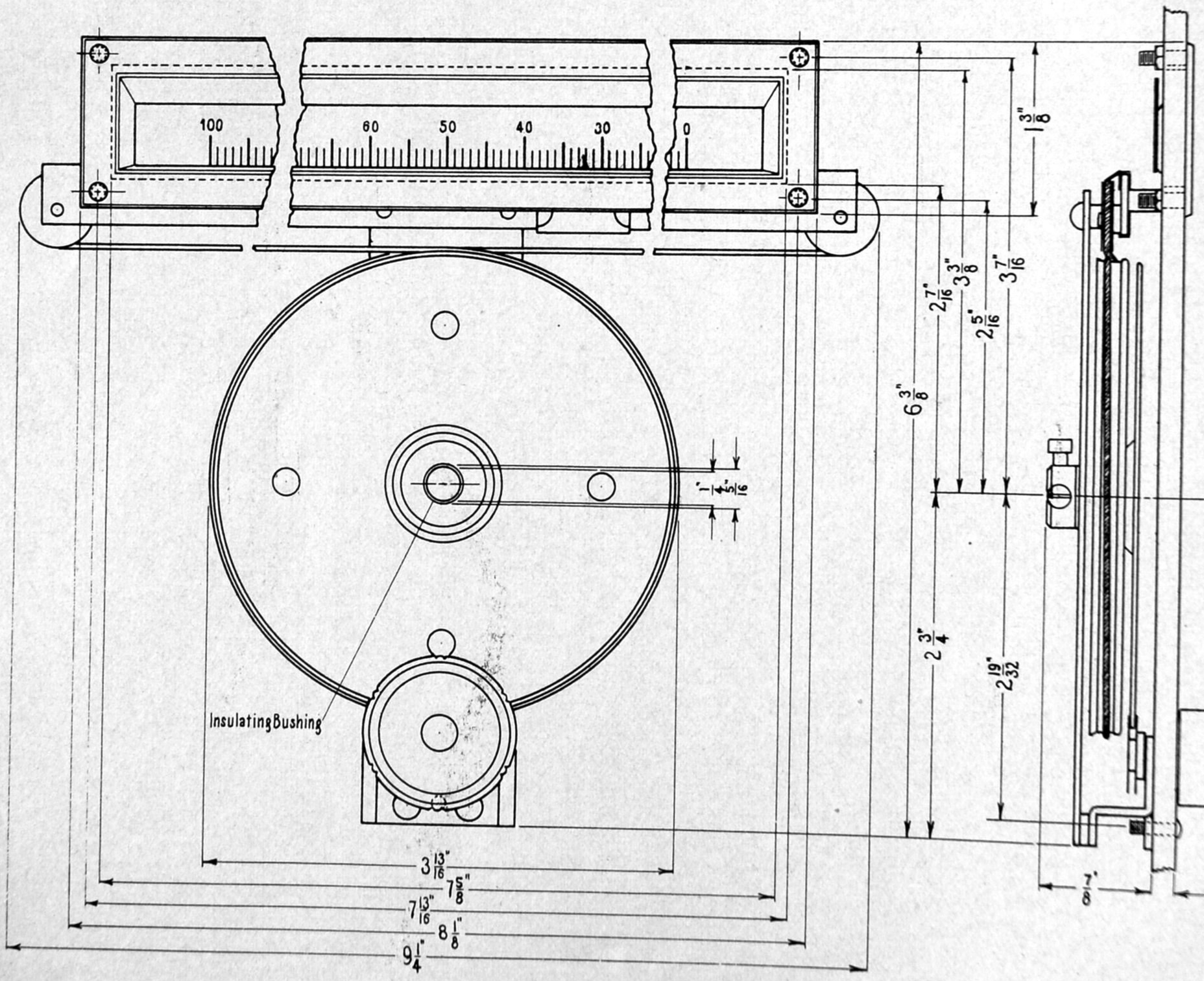

2-A-6 FULL-VISION VERNIER DIAL
NATIONAL COMPANY, Malden, Mass.

No. VK has a spring-tension cord-drive to the sliding pointer. The ratio of the condenser drive is 10 to 1. The scale is of celluloid, permitting illumination from the rear. Complete dimensions are given above for the mounting holes and their relation to the opening in the panel for the scale. Following is a list of scales available:

No. 2	0–100 divisions	180° rotation	Right to left
No. 3	100–00	180°	Left to right
No. 4	0–150	270°	Right to left

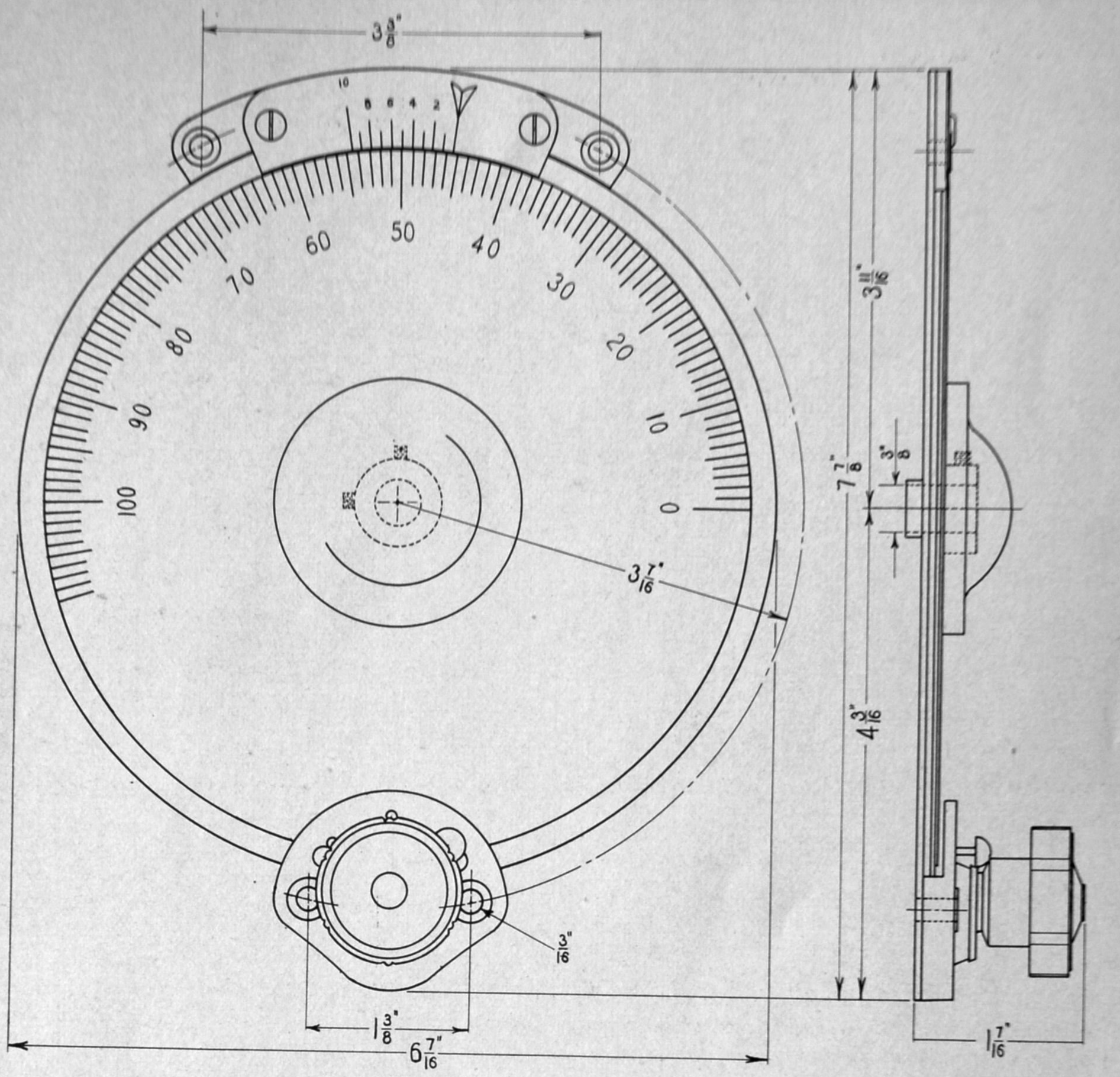

2-A-7 GERMAN SILVER VERNIER DIAL

NATICNAL COMPANY, Malden, Mass.

No. NW is a German Silver dial intended for use on large transmitting condensers and various types of precision equipment. The divisions are large enough that the vernier scale can be read quickly. The variable-ratio drive has large friction surfaces and ample tension to rotate a heavy load smoothly and positively. Multiple set-screws are located under the removeable center cap.

The scales, which are engine-divided, are available as follows:

No. 2	0–100 divisions	180° rotation	Counter-clockwise
No. 3	100–0	180°	Clockwise
No. 4	0–150	270°	Counter-clockwise
No. 5	0–200	360°	Counter-clockwise

The drive ratio adjustment is located under the control knob.

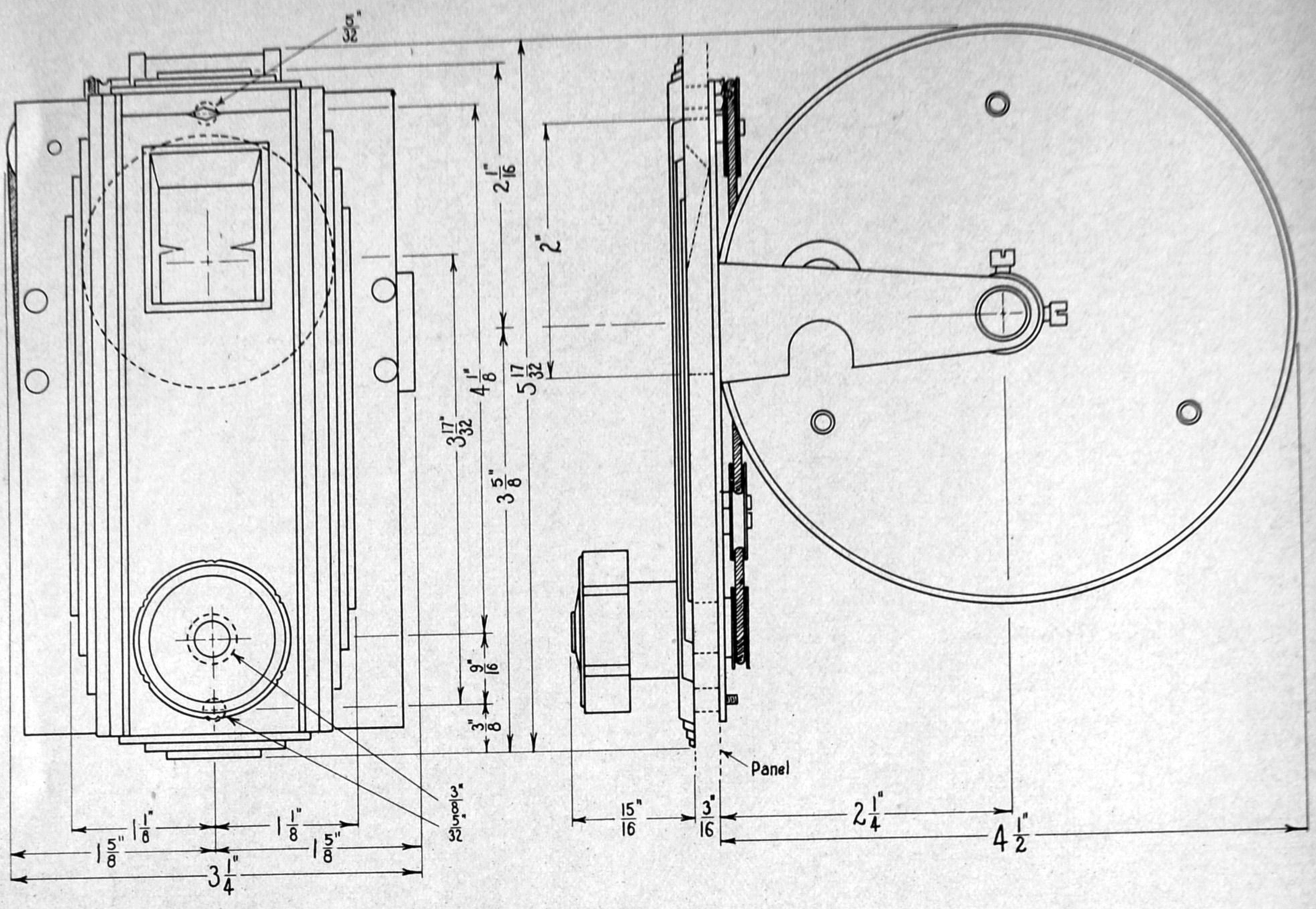

2-A-8 ILLUMINATED DRUM DIAL

NATIONAL COMPANY, Malden, Mass.

No. H drum dial employs a cord drive with spring take-up. A small lamp, mounted inside the drum, projects the scale reading onto a ground glass screen which carries the reference line. Thus parallax is eliminated entirely. Cords used in this and the VK dial are treated to protect them indefinitely against any tendency to wear or stretch.

To determine the direction of rotation for the scale, consider the movement of the condenser when it is viewed from the right hand side of the drum dial. Scales are available as follows:

No. 2	0–100 divisions	180° rotation	Counter-clockwise
No. 3	100–0	180°	Clockwise
No. 4	0–150	270°	Counter-clockwise

3-A-1 MIDGET COIL FORM, 4 PRONGS
NATIONAL COMPANY, Malden, Mass.

No. XR-1 is a midget coil form with prongs for a standard 4-prong socket, while XR-2 is the same form without pins. The material from which the forms are molded is the Bakelite formula R-39, a composition developed for coil forms in which the losses have been reduced to the lowest point. Its characteristic brown color must not be confused with other brown compositions which are sometimes offered as less expensive substitutes, but which lack the properties required for high frequency inductances.

Forms without pins are generally mounted on brackets attached to the closed end of the tube. This material takes a fine or coarse thread for winding coils requiring great precision. R-39 material is not affected by moisture, nor does it shrink. Consequently, coils wound without threading need only a coat of R.F. lacquer to protect the turns when the coils are handled.

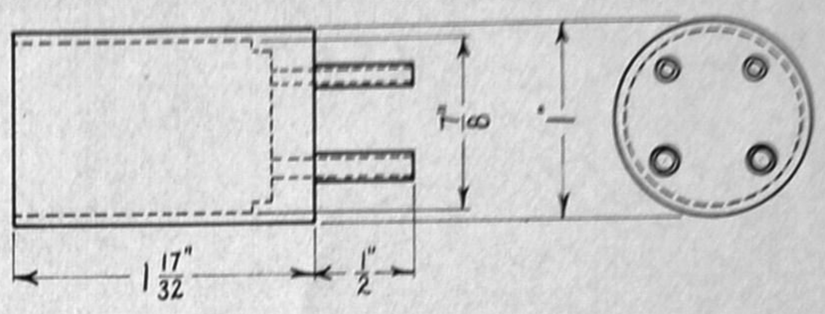

Leads from the windings should be passed through the holes in the pins. Then sufficient heat should be applied to the ends of the pins to make the solder run up into the holes. Finally, the wires should be cut off after the soldering operation has been completed.

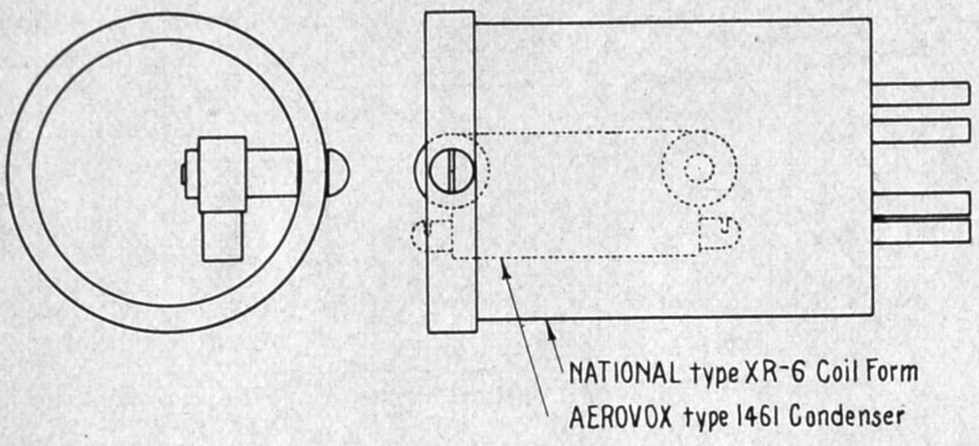

Illustrating one method of mounting a No. 1461 AEROVOX condenser (see 1-F-3) for band-spread tuning

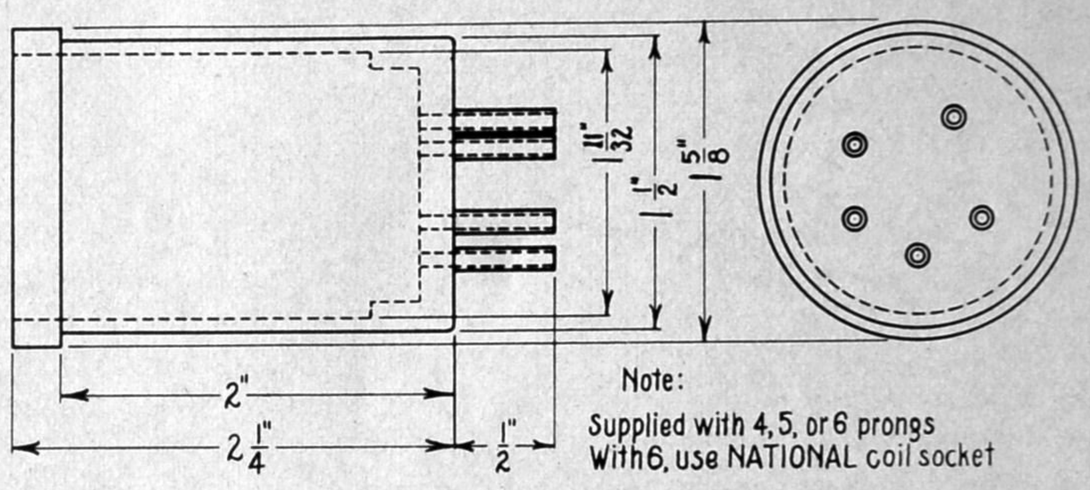

3-A-2 STANDARD COIL FORM, 4, 5, OR 6 PRONGS
NATIONAL COMPANY, Malden, Mass.

Nos. XR-4, XR-5, and XR-6 are coil forms having 4, 5, and 6 prongs respectively. Moulded of R-39 Bakelite, they are large enough to carry coils for fairly low frequencies, and small enough for high frequency windings as well. A depression on the top of the rim carries a color mark to identify the frequency range for which the coil is intended. The molding of these forms is extremely accurate, permitting them to be threaded readily with a very fine pitch.

Leads should be passed through holes in the pins, and solder run in at the ends. The pins fit standard 4-, 5-, and 6-prong tube sockets. The detail view above shows a condenser mounted in the coil form for band-spread tuning. Other types, such as the mica padding condenser shown at 1-B-1 can be used, also.

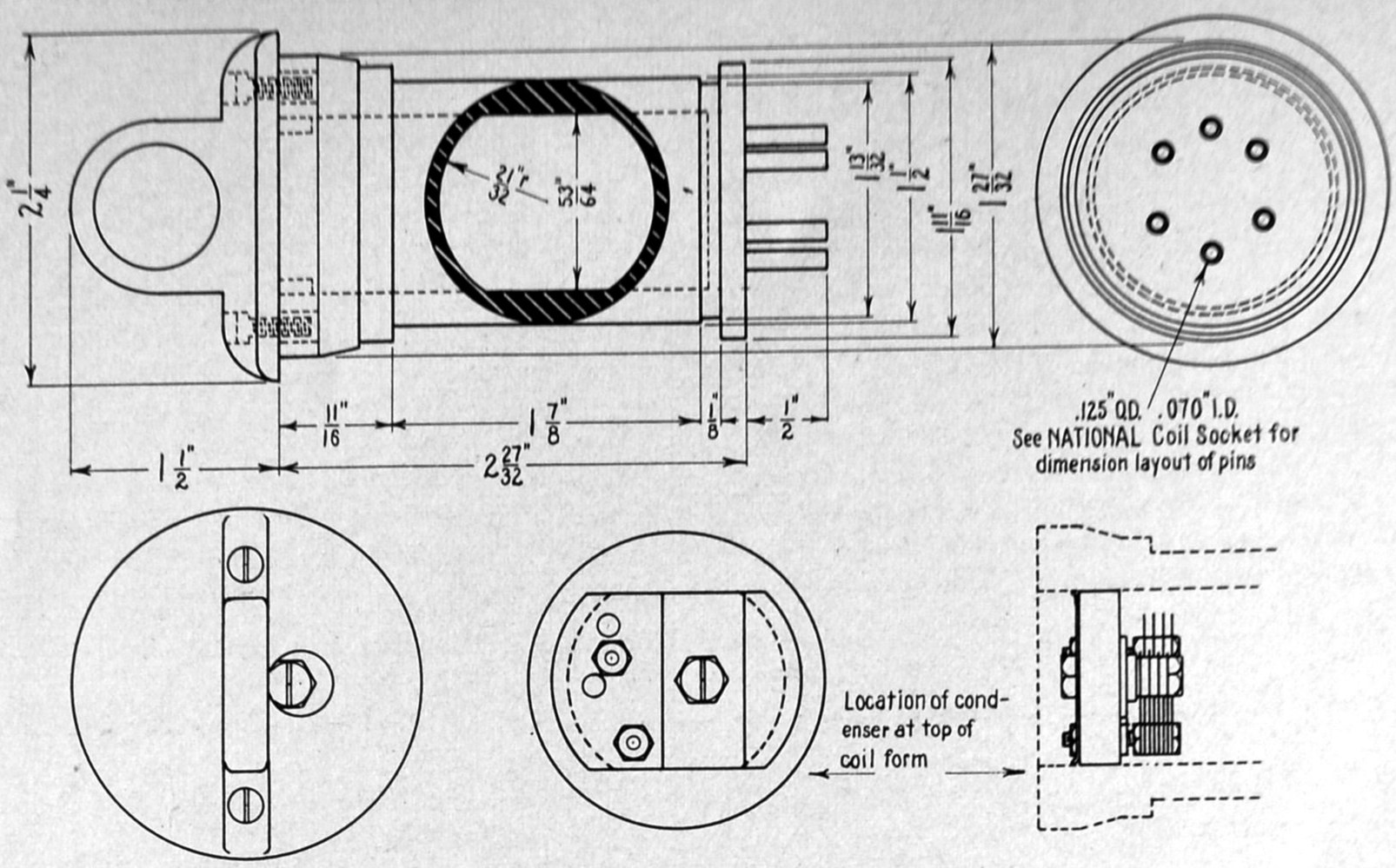

3-A-3 HANDLE TYPE COIL FORMS

NATIONAL COMPANY, Malden, Mass.

No. XR-39A coil form is equipped with an air-dielectric padding condenser, as illustrated above, while XR-39M has a mica-dielectric padding condenser. This type of form, molded of R-39 Bakelite, is intended to be plugged into a shielded socket from the front of the panel. The handle and the front disc are an aluminum casting so that, when the coil is in place, the shielding provided by the front panel is complete.

As the cross-section drawing shows, the inside of the form has two flat sides. This is arranged to accommodate the shape of the air padding condenser. The condenser is adjusted with a screw-driver through a hole in the front plate.

This type of coil form is fitted with 6 pins for a standard 6-prong tube socket. The padding condenser is of the type shown in the Second Section, 1-B-2, the mica condenser at 1-B-1, and the shielded socket at 4-A-2.

If it is desired to protect the windings against handling, a Bakelite tube can be slipped on from the lower end, where it will ride on the $1\frac{11}{16}$-in. shoulders above and below the winding space. A groove, $1\frac{13}{32}$ in. in diameter, at the end of the winding space, is for a concentrated winding.

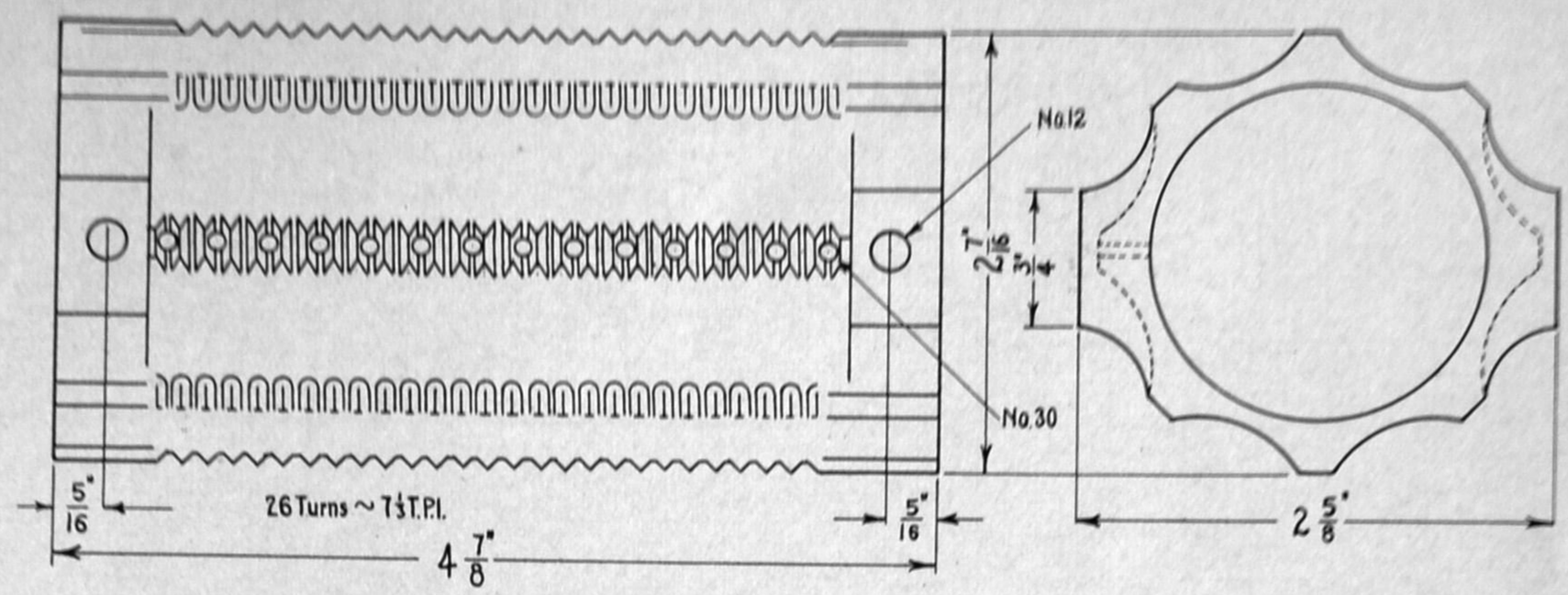

3-B-1

20-, 40-METER COIL FORM
NATIONAL COMPANY, Malden, Mass.

No. XR-10 is a Steatite coil form for low-loss 20- or 40-meter transmitters. Usually, the form is mounted on stand-off insulators. Eight flutes are threaded for 26 turns. One flute in line with the mounting bosses is drilled at every other thread.

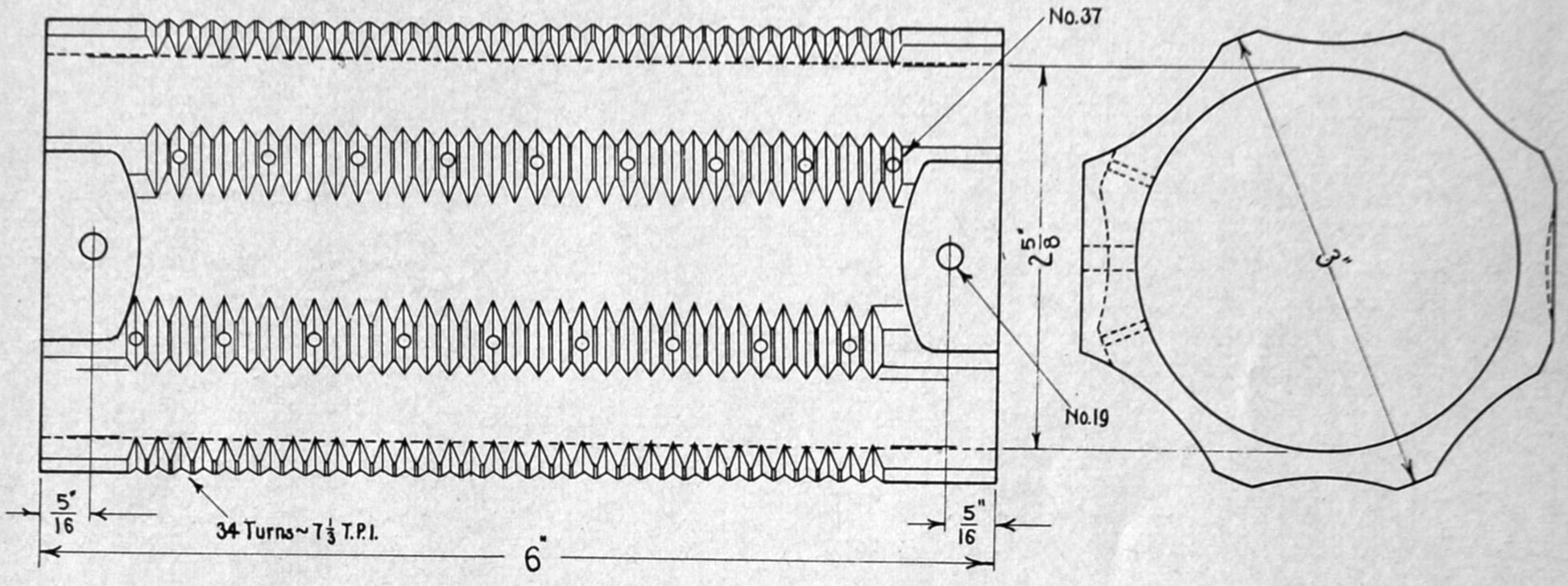

3-B-2

80-METER COIL FORM
NATIONAL COMPANY, Malden, Mass.

No. XR-11 is an 80-meter coil form made of Steatite, while XR-11-A is a form of identical dimensions but of low-loss ceramic material. While the former is preferable electrically and mechanically, the latter type is widely used by amateurs because it is much lower in price. This form is threaded for 34 turns, with staggered holes in two flutes every fourth turn.

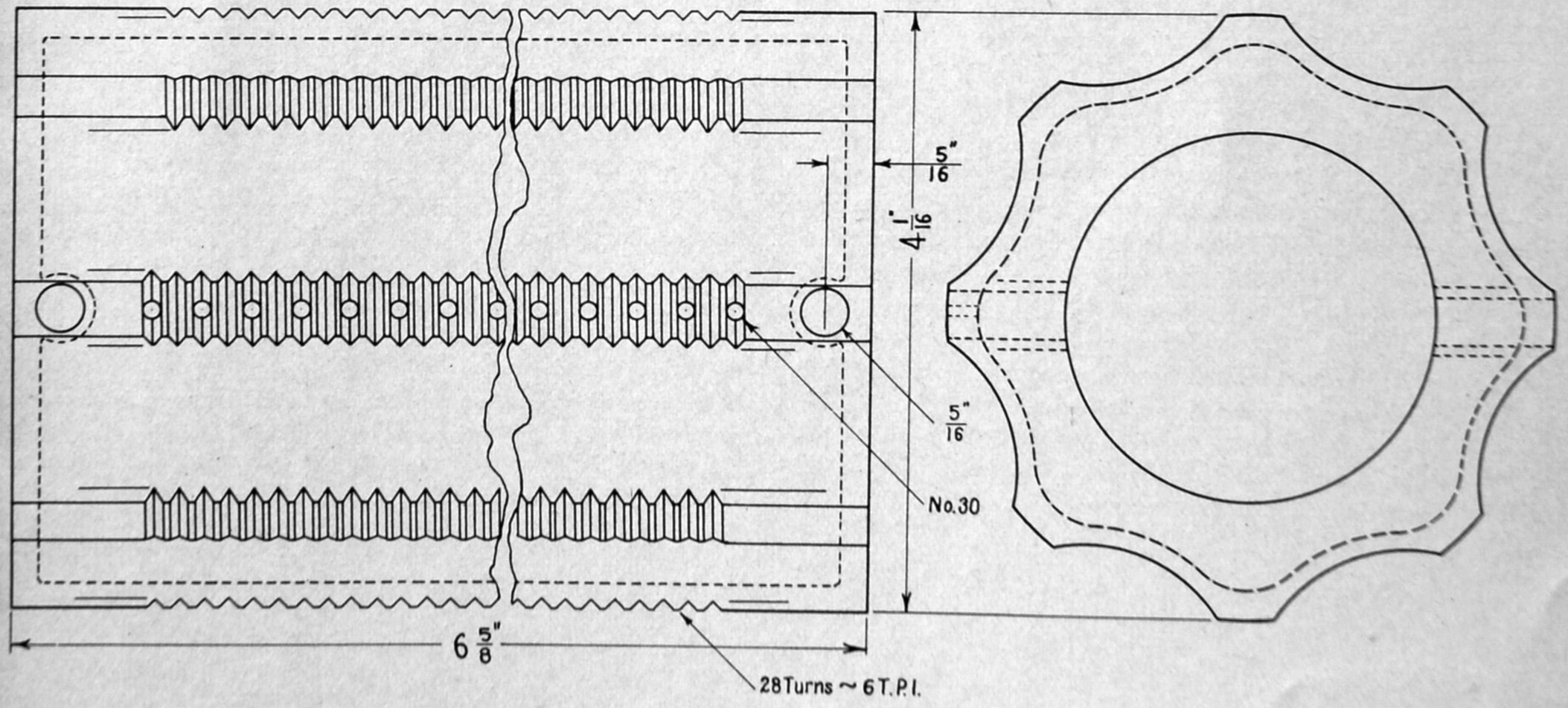

3-B-3

160-METER COIL FORM
NATIONAL COMPANY, Malden, Mass.

No. XR-12 is a 160-meter coil form made of Steatite, while XR-12-A is a form of identical dimensions but of low-loss ceramic material. The latter is lower in cost, but the Steatite form is preferable where lowest losses and greatest mechanical strength are required. The threaded flutes carry 28 turns. Holes are drilled at alternate threads along one flute.

Note that the ends of the tube are partly closed, but the front and rear mounting bosses are solid, so as to be amply strong and rigid. It is advisable to secure the form at the front and rear in order to give it ample mechanical security.

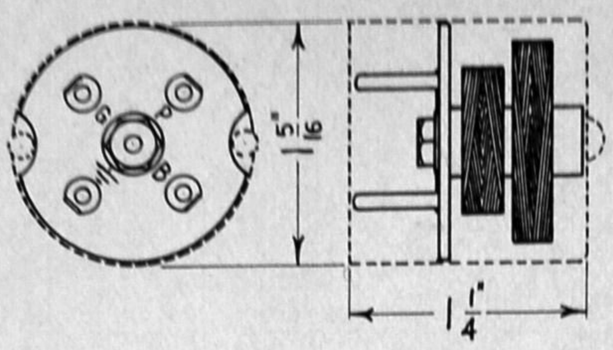

3-C-1 INTERRUPTION-FREQUENCY OSCILLATOR COIL
NATIONAL COMPANY, Malden, Mass.

No. OSR comprises two windings mounted in an aluminum can. They are used for the interruption-frequency oscillator in super-regenerative circuits. Terminals are secured to a Bakelite disc inside the bottom of the shield. The unit is mounted by two screws riveted to the shield. While these coils can be used in a variety of super-regenerative circuits, they were originally designed for the NATIONAL type SRR receiver.

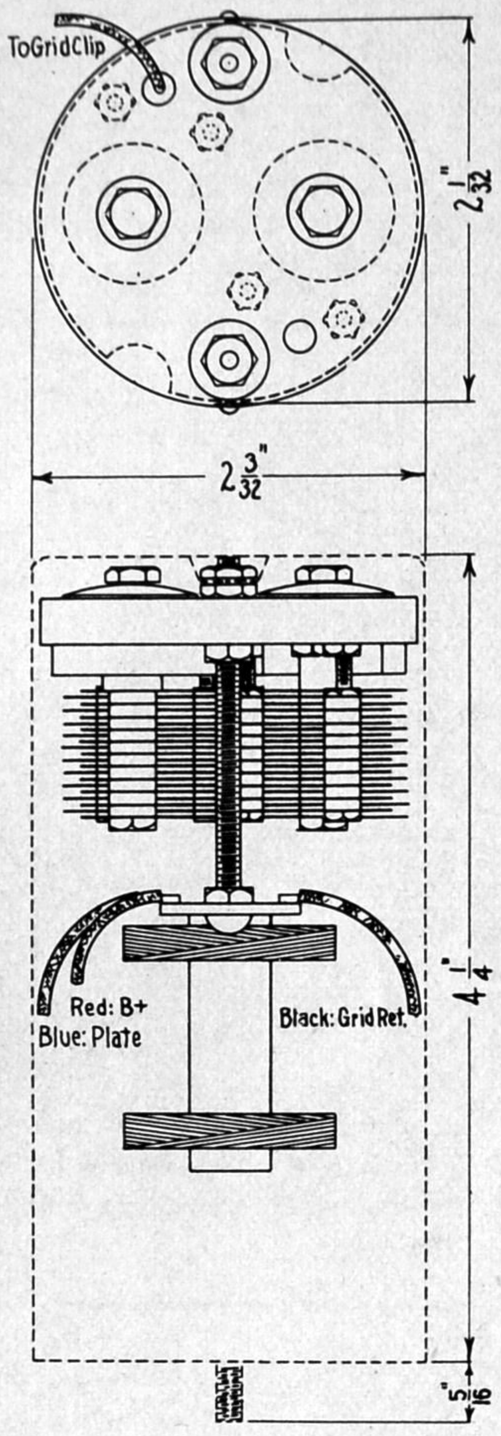

3-C-2 450–550 K.C. OR 175 K.C. I.F. TRANSFORMER
NATIONAL COMPANY, Malden, Mass.

I.F. transformers of the design shown above are made in two types: one for intermediate frequencies between 450 and 550 k.c., and one for 175 k.c. They are interchangeable as to arrangement and dimensions. Every feature to give high efficiency has been built into these units. Insulation is of Steatite, air-dielectric condensers are furnished, and Litz wire is used for the coils. The condensers are adjusted through holes in the top of the aluminum can. Two nuts on the top hold the Steatite block, on which the parts are mounted, to the can. At the bottom of the can, two screws are riveted, by means of which the unit can be secured to the chassis.

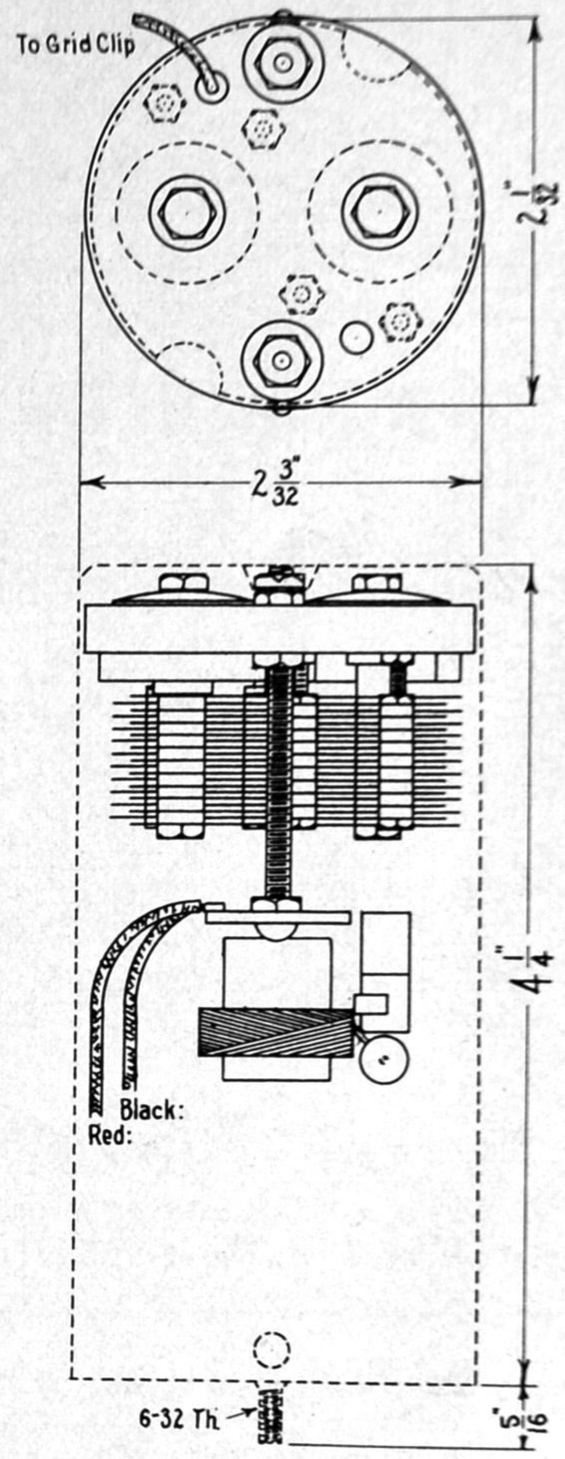

3-C-3 450–550 K.C. OR 175 K.C. OSCILLATOR UNIT
NATIONAL COMPANY, Malden, Mass.

Oscillator coils to match the I.F. transformers are designed for 450 to 550 k.c. and for 175 k.c. Both types are built to the dimensions given above. The insulating block which carries the parts is of Steatite, and is held in the can by two nuts. Air-dielectric tuning condensers are provided. The coils are wound with Litz wire. At the side of the impregnated wooden pin on which the coil is wound there are a resistor and fixed condenser. Screws are riveted to the aluminum can at the bottom so that the unit can be mounted on the chassis. A special arrangement of the condensers eliminates variations in capacity from temperature changes.

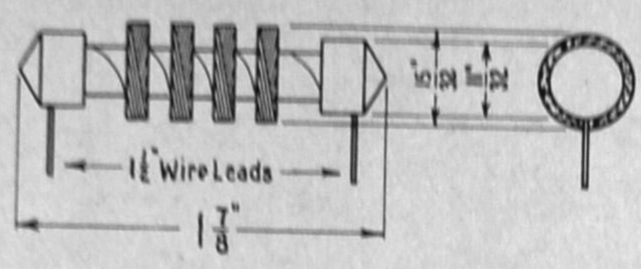

3-D-1 LOW-CURRENT R.F. CHOKE
NATIONAL COMPANY, *Malden, Mass.*

No. R-100 choke is made up of four, continuous universal windings, mounted on an Isolantite rod. Both pig-tails and metal end-caps are provided for connections. The inductance is 2½ m.h.; the D.C. resistance 50 ohms; and the distributed capacity 1. mmf. Rated at 125 m.a. continuous current capacity, this choke is suitable for low-power transmitters and receiving circuits.

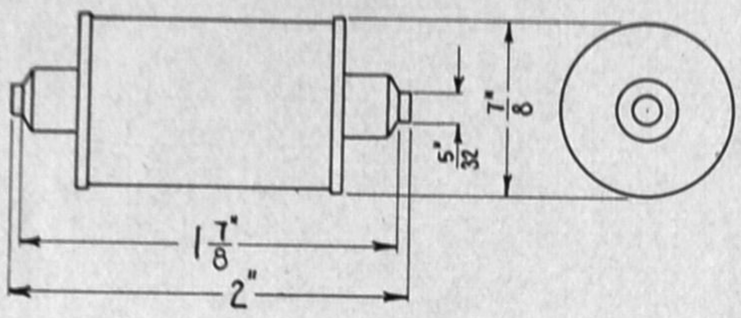

3-D-2 R.F. CHOKE FOR SCREEN-GRID RECEIVER CIRCUITS
NATIONAL COMPANY, *Malden, Mass.*

No. R-90 is a multi-section choke intended for use in the screen-grid or plate circuits of screen-grid tubes, and between the detector and first audio stage. This choke is widely used in short-wave and broadcast receivers as well. The spacing of the metal end-caps fits a standard grid leak mounting. The inductance is 90 m.h. and the D.C. resistance 350 ohms.

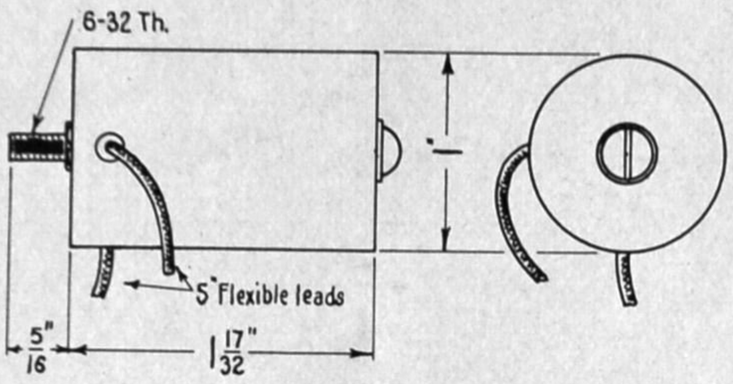

3-D-3 R.F. CHOKE FOR SUPERHETERODYNE CIRCUITS
NATIONAL COMPANY, *Malden, Mass.*

No. R-201 is a two-section choke with universal windings, intended for the output circuit of the second detector in receivers using an intermediate frequency of 475 k.c. The Bakelite case is mounted by a screw projecting from the bottom. The inductance is approximately 12 m.h. and the D.C. resistance 120 ohms.

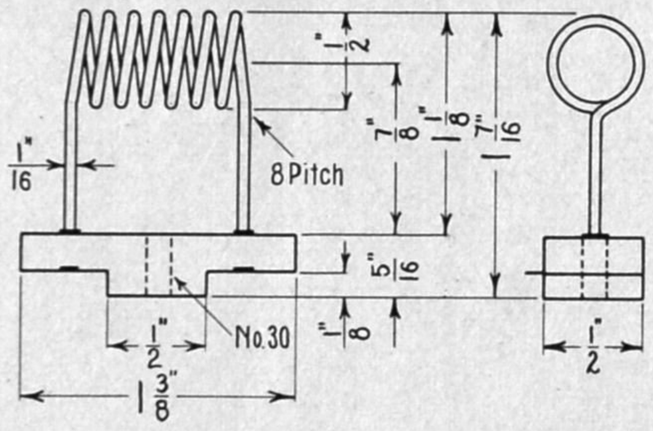

3-D-4 5-METER COIL OR R.F. CHOKE
NATIONAL COMPANY, *Malden, Mass.*

No. XR-9 is used as a 5-meter coil in transmitters, transceivers, and receivers, and as an R.F. choke. The coil is of 1/16-in. copper wire, carried on a Steatite base. The unit can be mounted with a single screw through the base.

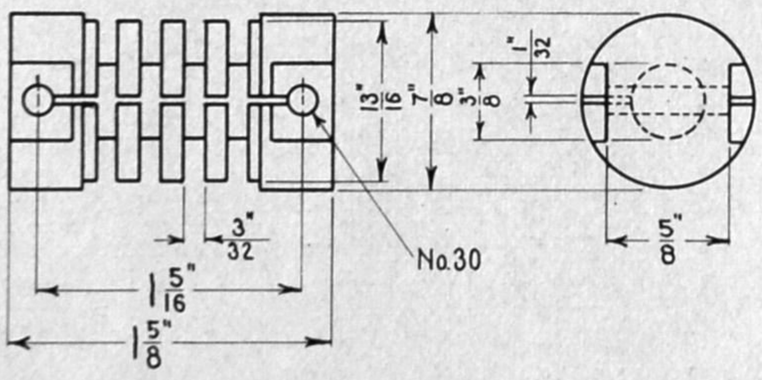

3-D-5 R.F. CHOKE COIL FORM
NATIONAL COMPANY, *Malden, Mass.*

No. XT-8 is a Steatite form for winding R.F. chokes or precision resistors. Note that a slot is cut between the sections so that the wire can be led from one to the other. Flat depressions are provided at each end for terminals and mounting.

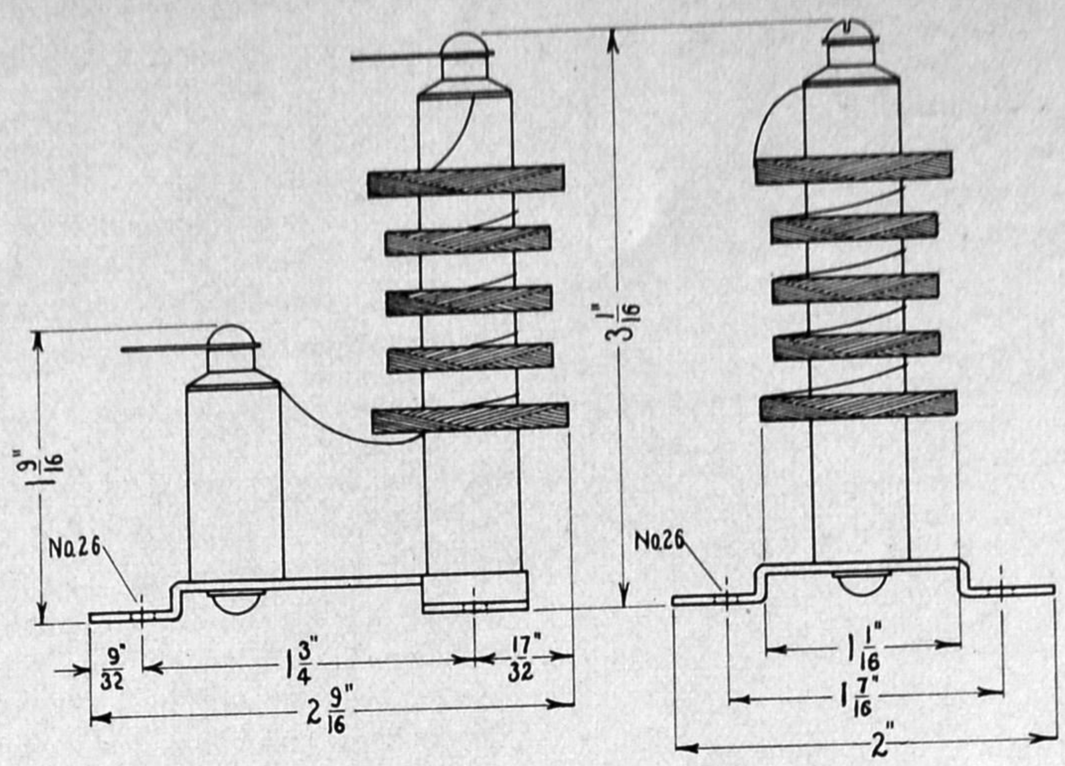

3-D-7

R.F. CHOKE
NATIONAL COMPANY, Malden, Mass.

No. 154 is a transmitter choke comprising five continuous universal windings capable of carrying .6 amp. continuously. The coils and terminals are carried on Isolantite pillars so that R.F. leakage through the insulation is eliminated. This choke is rated at 4 m.h., and is designed to give maximum impedance at 40 meters. The D.C. resistance is 10 ohms.

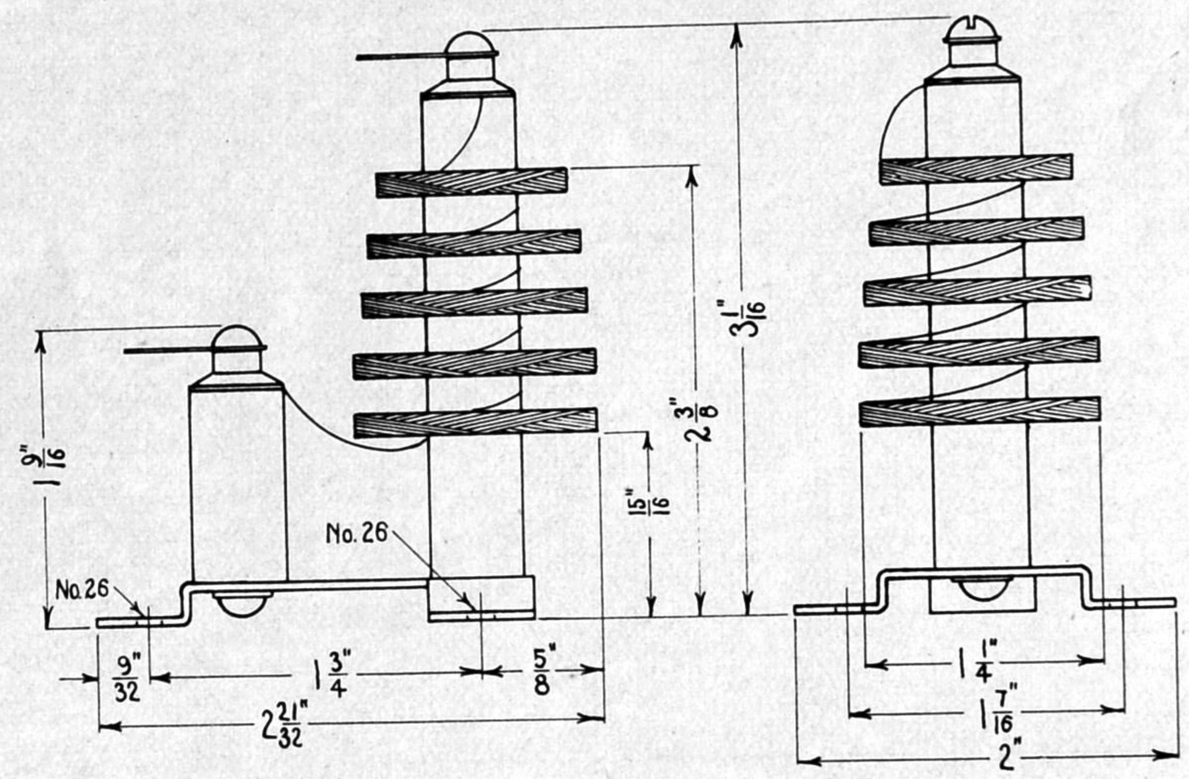

3-D-8

R.F. CHOKE
NATIONAL COMPANY, Malden, Mass.

No. 152 is a transmitter choke comprising five continuous universal windings capable of carrying .6 amp. continuously. The mounting and the Isolantite supports are identical with those used in the No. 154 choke. This choke is rated at 4 m.h., and is designed to give maximum impedance at 160 meters. The D.C. resistance is 10 ohms.

The mounting is interchangeable with No. 154.

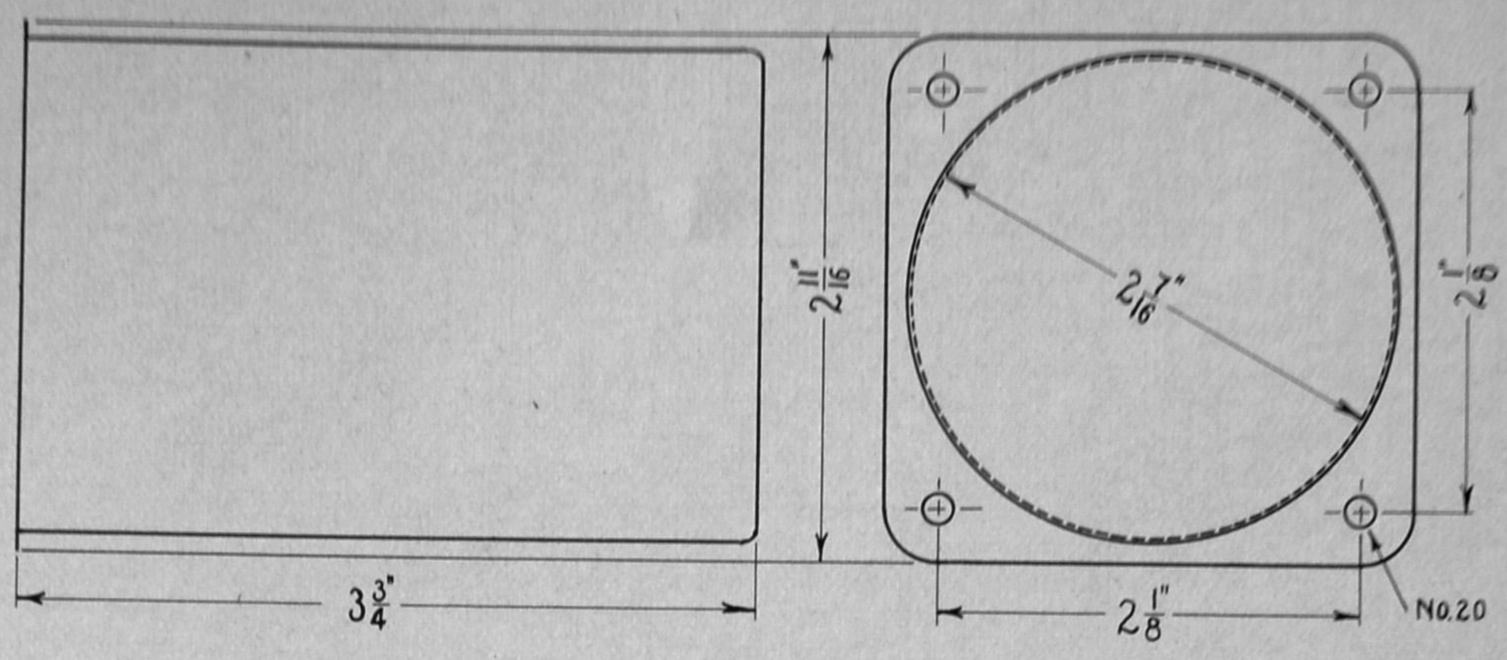

4-A-1 SQUARE-BASE COIL SHIELD
NATIONAL COMPANY, Malden, Mass.

No. J-30 is a one-piece aluminum coil shield as illustrated above. It is intended as a shield for coils that are mounted permanently on the chassis. The shield is mounted by screws in the four corners of the base flange. Some designers use this shield behind a front panel, for plug-in coils, using a socket supported from the rear of the front panel.

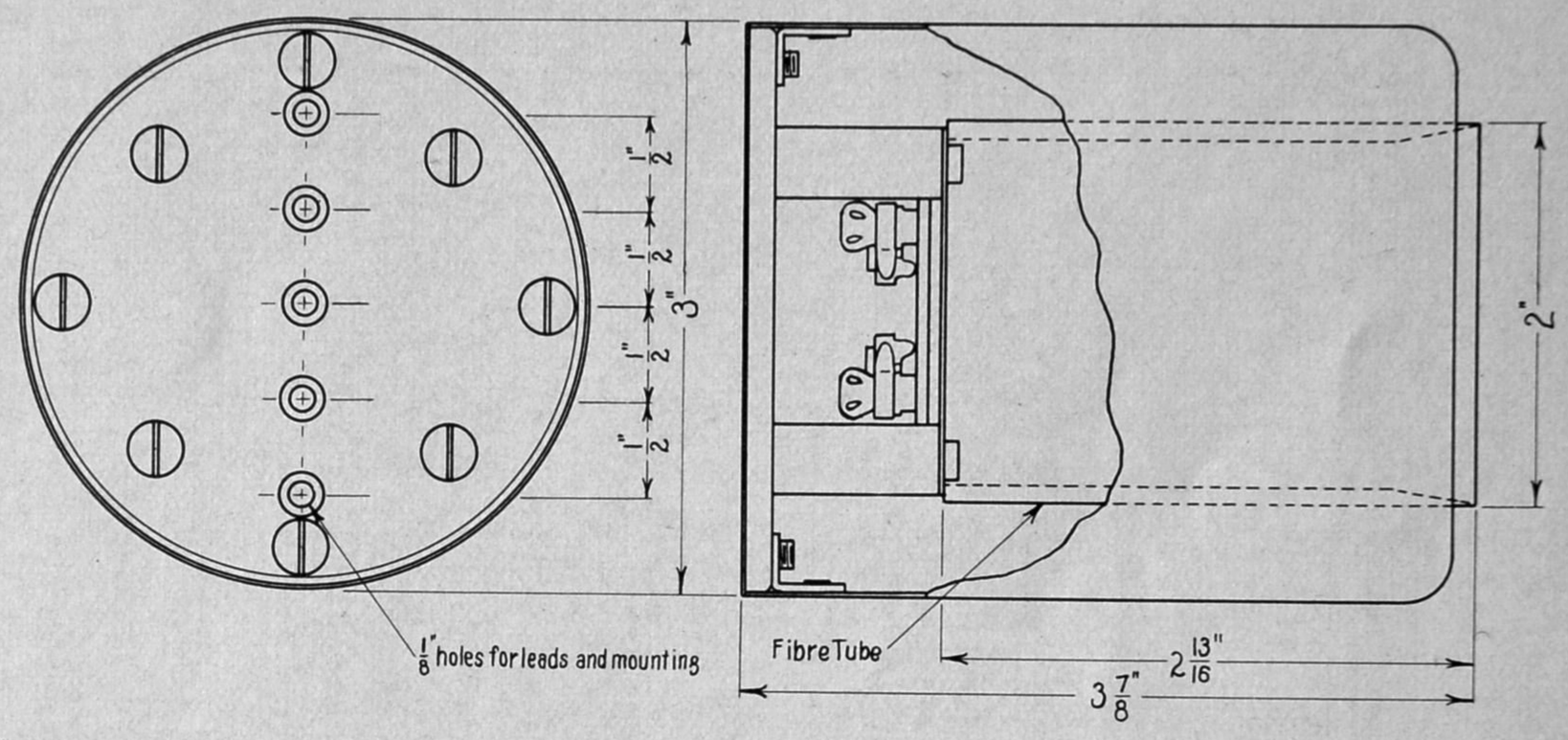

4-A-2 COIL SHIELD WITH 6-PRONG SOCKET
NATIONAL COMPANY, Malden, Mass.

No. XCS is the coil shield and 6-prong socket unit designed particularly for the XR-39 plug-in coil form shown at 3-A-3 of this section. The socket is fastened to the aluminum base by four supports. The aluminum shell has four angle pieces at the bottom, into which fastening screws are put through the base. A Bakelite tube, shown by dotted lines in the drawing above, guides the coil form.

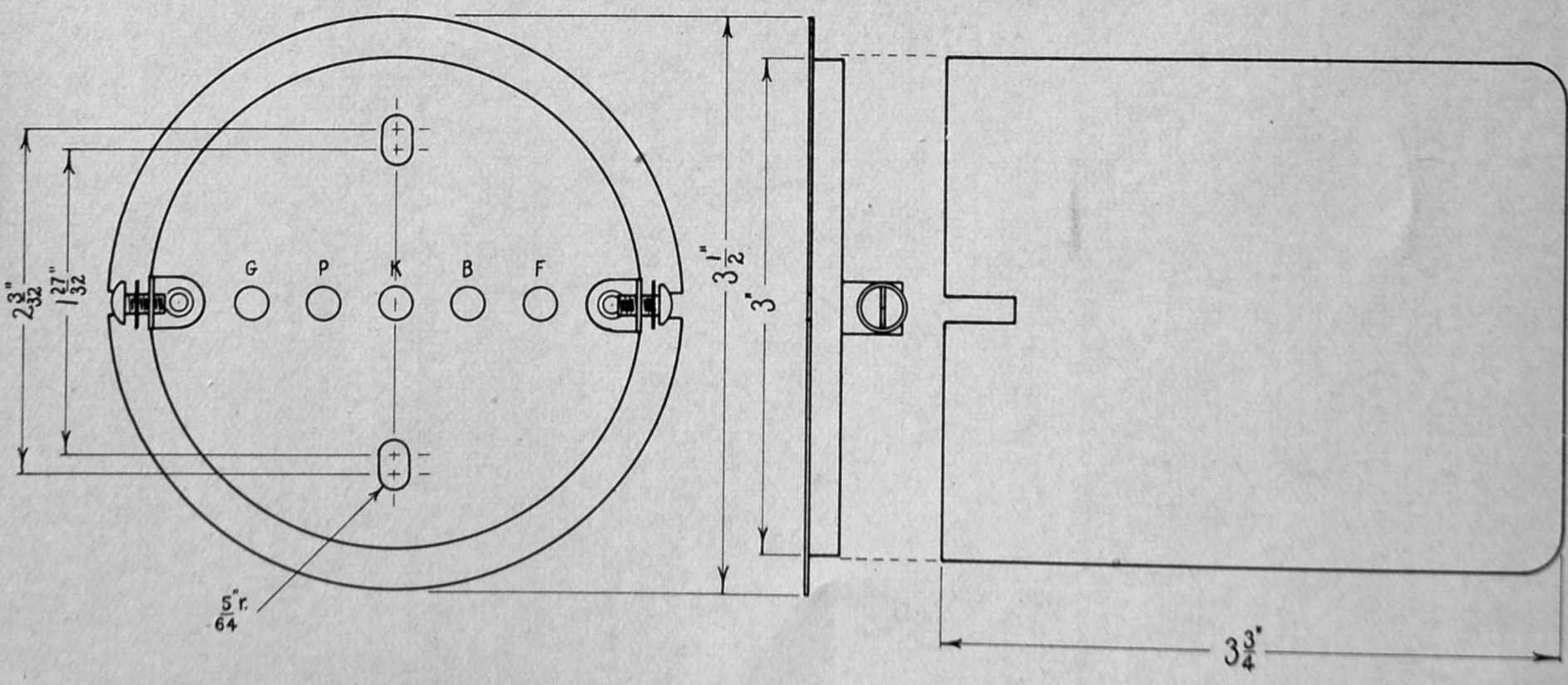

4-A-3 ROUND-BASE COIL SHIELD
NATIONAL COMPANY, Malden, Mass.

No. B-30 shield, of aluminum, is mounted by the base. This base has two angle brackets and screws which slip into slots in the aluminum shell. Holes are punched in the base for bringing out leads from the coil. This type of shield is particularly suited to coils in tuned R.F. receivers, altho it has many special applications in broadcast and short-wave circuits.

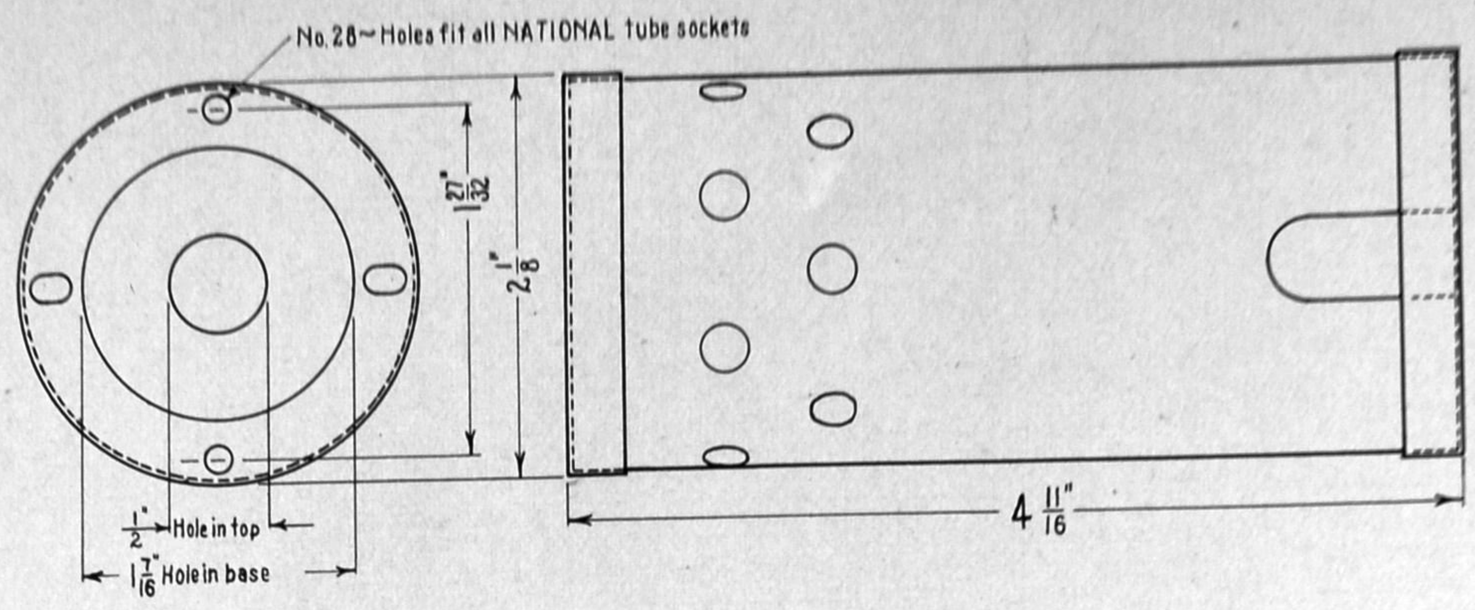

4-B-1 PLAIN TUBE SHIELD, WITH BASE AND CAP

NATIONAL COMPANY, Malden, Mass.

No. TS aluminum tube shield is large enough for all receiver tubes. The base is provided with one pair of round mounting holes and one pair of oval holes, so that it can be secured to practically any type of socket. There is a slot at the top of the shell for the screen-grid lead, and holes near the bottom for ventilation. This shield is intended particularly for the sockets shown at 5-A-1 to 5-A-4.

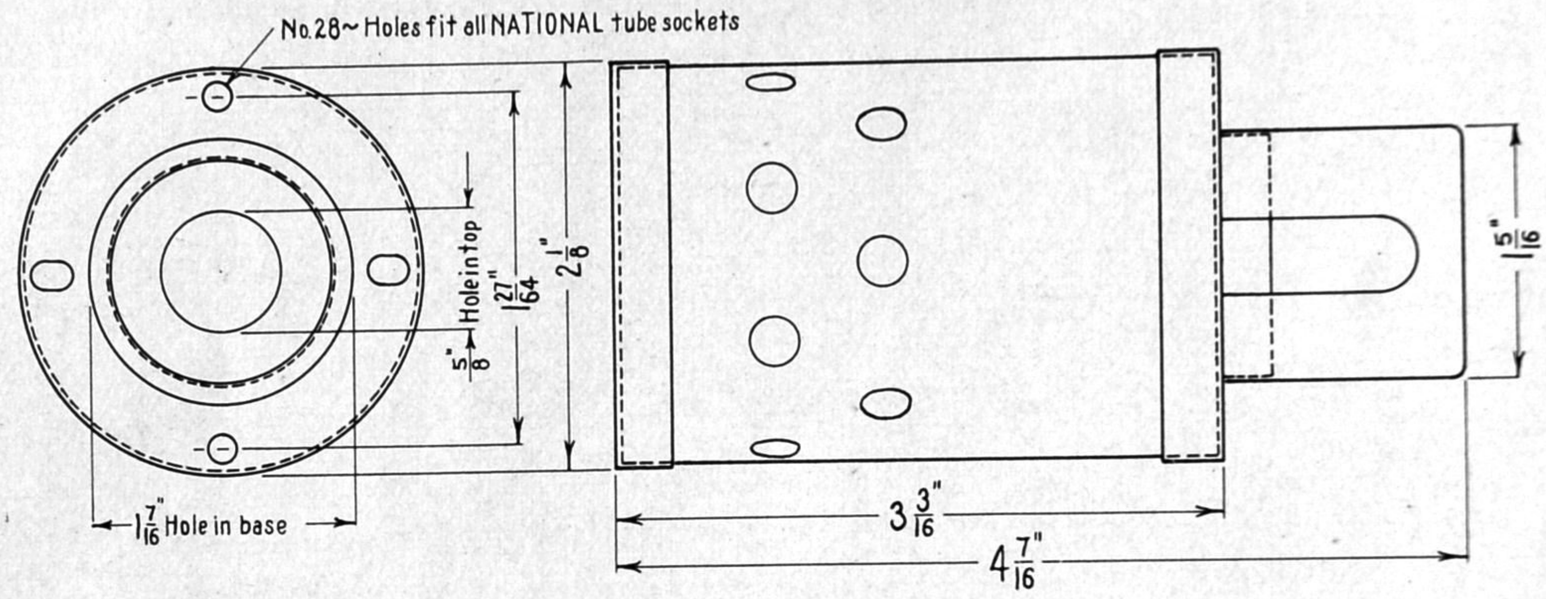

4-B-2 DOME-TUBE SHIELD, WITH BASE AND CAP

NATIONAL COMPANY, Malden, Mass.

No. T-50 aluminum tube shield is of four parts, designed for dome-top tubes. Two pairs of holes, one pair round and one pair oval, permit the base to be fastened to almost any type of socket. Ventilation is provided through holes near the bottom of the shell. The slot for the screen-grid lead is in the top cap. This shield is intended particularly for the sockets shown at 5-A-1 to 5-A-4.

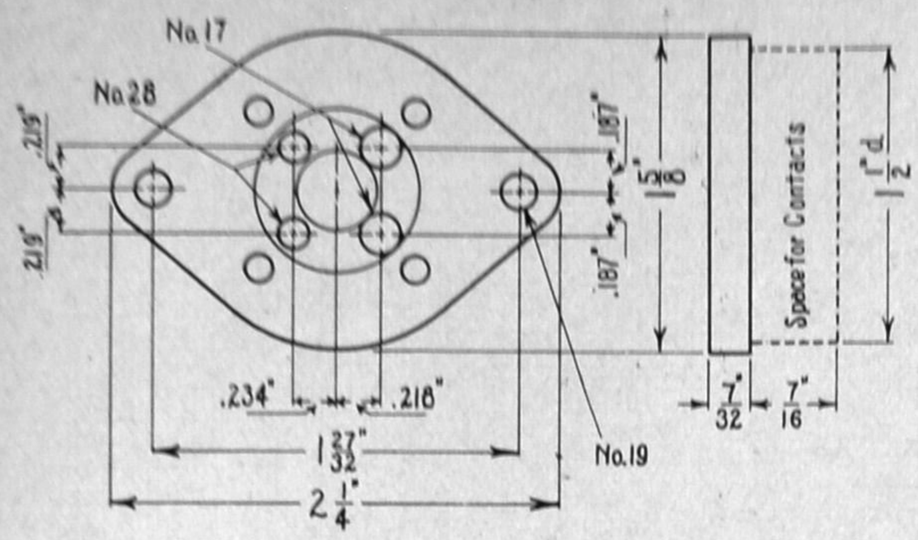

5-A-1

4-PRONG SOCKET
NATIONAL COMPANY, Malden, Mass.

The four-prong socket illustrated here is of Isolantite or Steatite, fitted with large-surface contacts which are reinforced by V-shaped steel springs. The dotted lines in the drawing indicate the space beneath the base which must be allowed for the contacts.

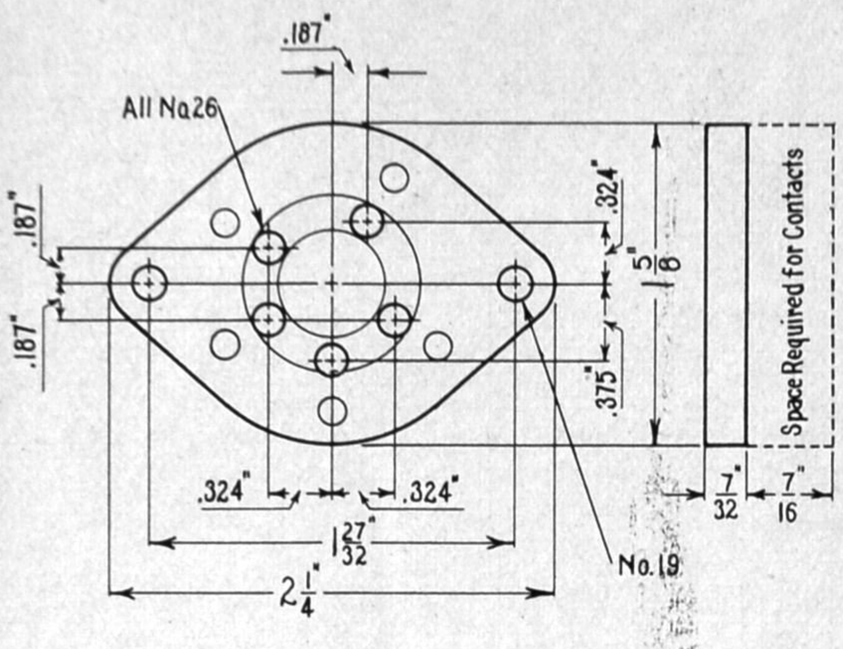

5-A-2

5-PRONG SOCKET
NATIONAL COMPANY, Malden, Mass.

The five-prong socket illustrated here is of Isolantite or Steatite, fitted with large-surface contacts which are reinforced by V-shaped steel springs. The dotted lines in the drawing indicate the space beneath the base which must be allowed for the contacts.

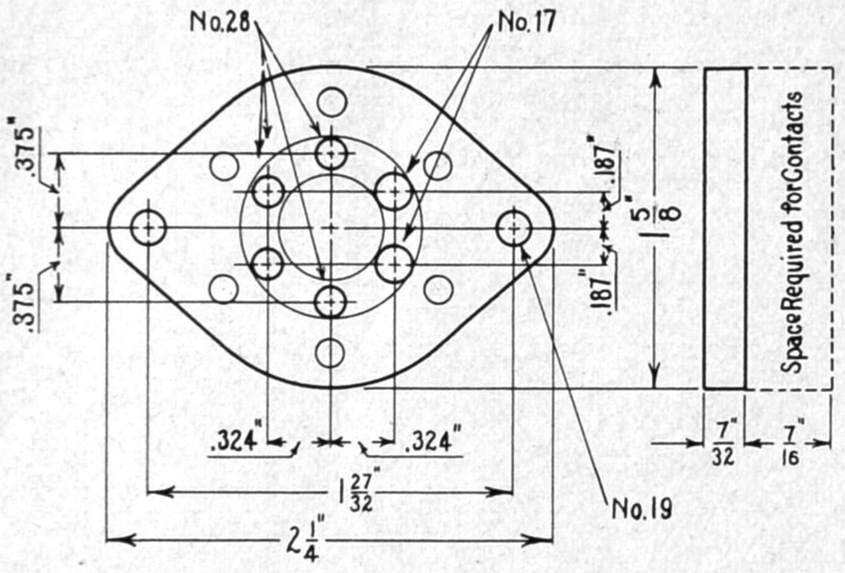

5-A-3

6-PRONG SOCKET
NATIONAL COMPANY, Malden, Mass.

The six-prong socket illustrated here is of Isolantite or Steatite, fitted with large-surface contacts which are reinforced by V-shaped steel springs. The dotted lines in the drawing indicate the space beneath the base which must be allowed for the contacts.

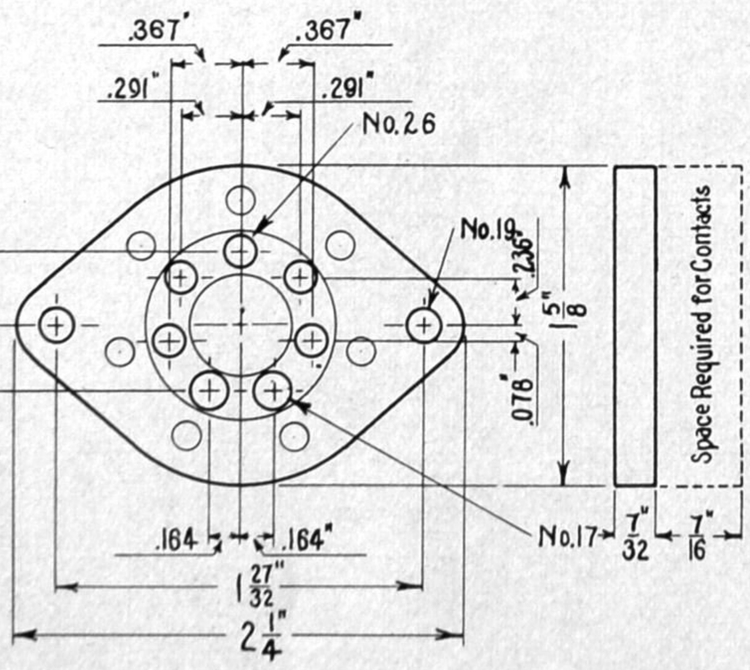

5-A-4

7-PRONG SOCKET
NATIONAL COMPANY, Malden, Mass.

The seven-prong socket illustrated here is of Isolantite or Steatite, fitted with large-surface contacts which are reinforced by V-shaped steel springs. The dotted lines in the drawing indicate the space beneath the base which must be allowed for the contacts.

5-A-5

8 PRONG SOCKET
National Company, Inc., Malden, Mass.

The eight-prong socket illustrated here is of Isolantite and is for the new metal tubes. It is fitted with full-area contacts. The dotted lines in the drawing indicate the space beneath the base which must be allowed for the contacts.

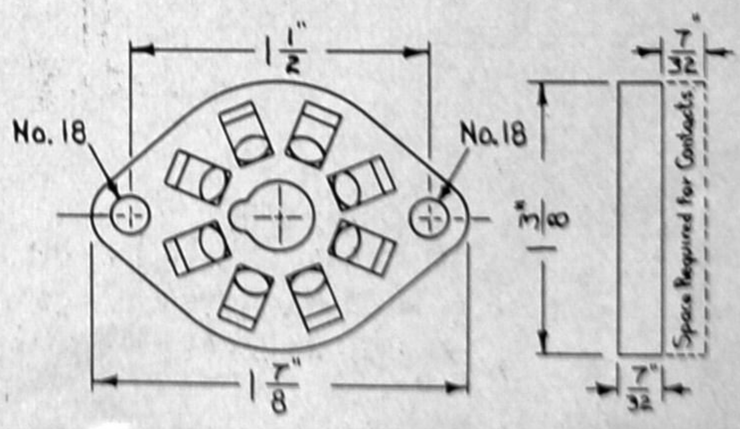

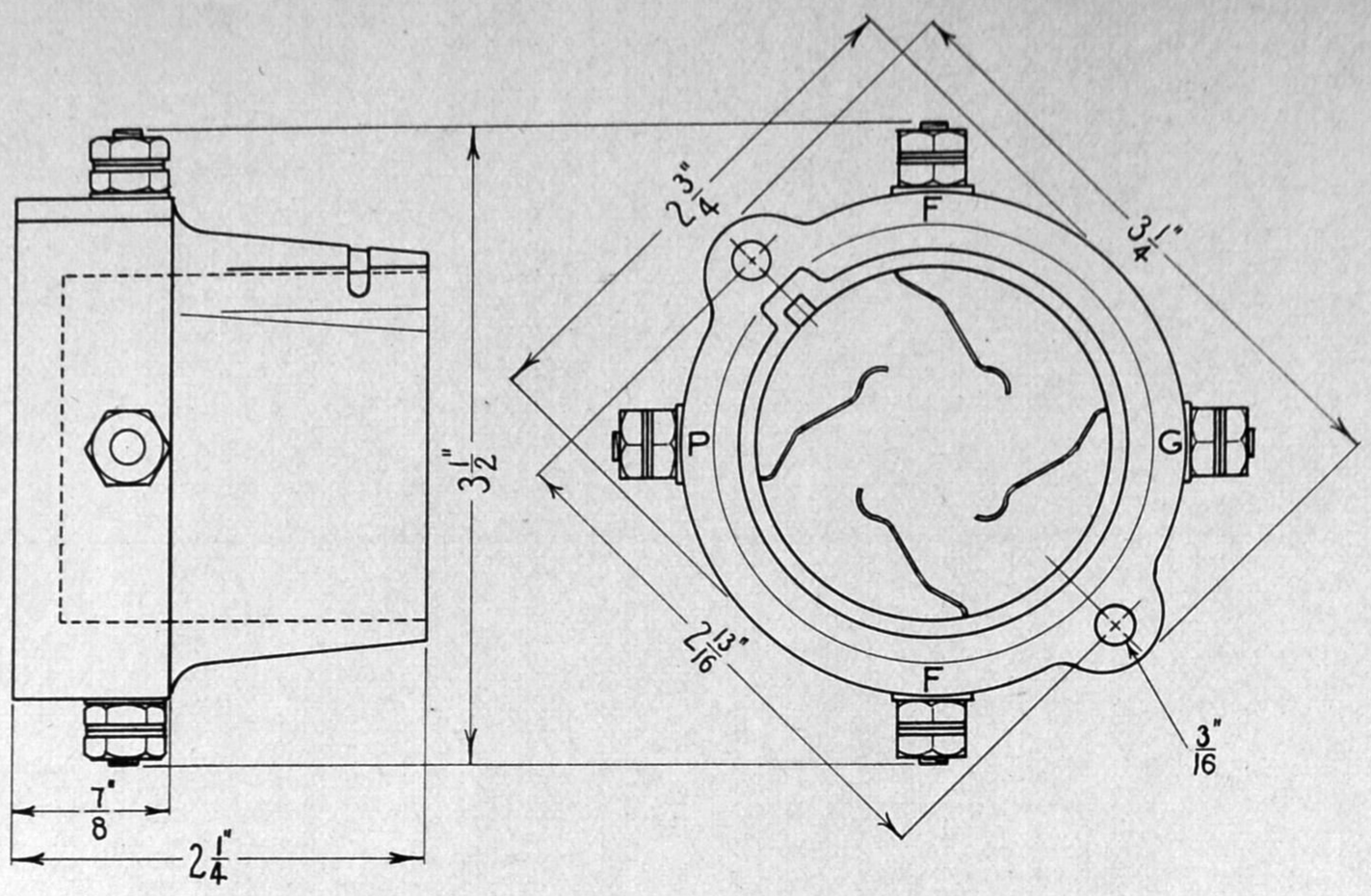

5-A-6 50-WATT BAYONET SOCKET
NATIONAL COMPANY, Malden, Mass.

No. XC-50 is a bayonet-type socket for 50-watt tubes. The base is of Steatite, in one piece. Arcing has been eliminated by the all-Steatite construction. Nor is it possible for an arc to occur from the prongs to the chassis, since the base is solid, as shown in the drawing above.

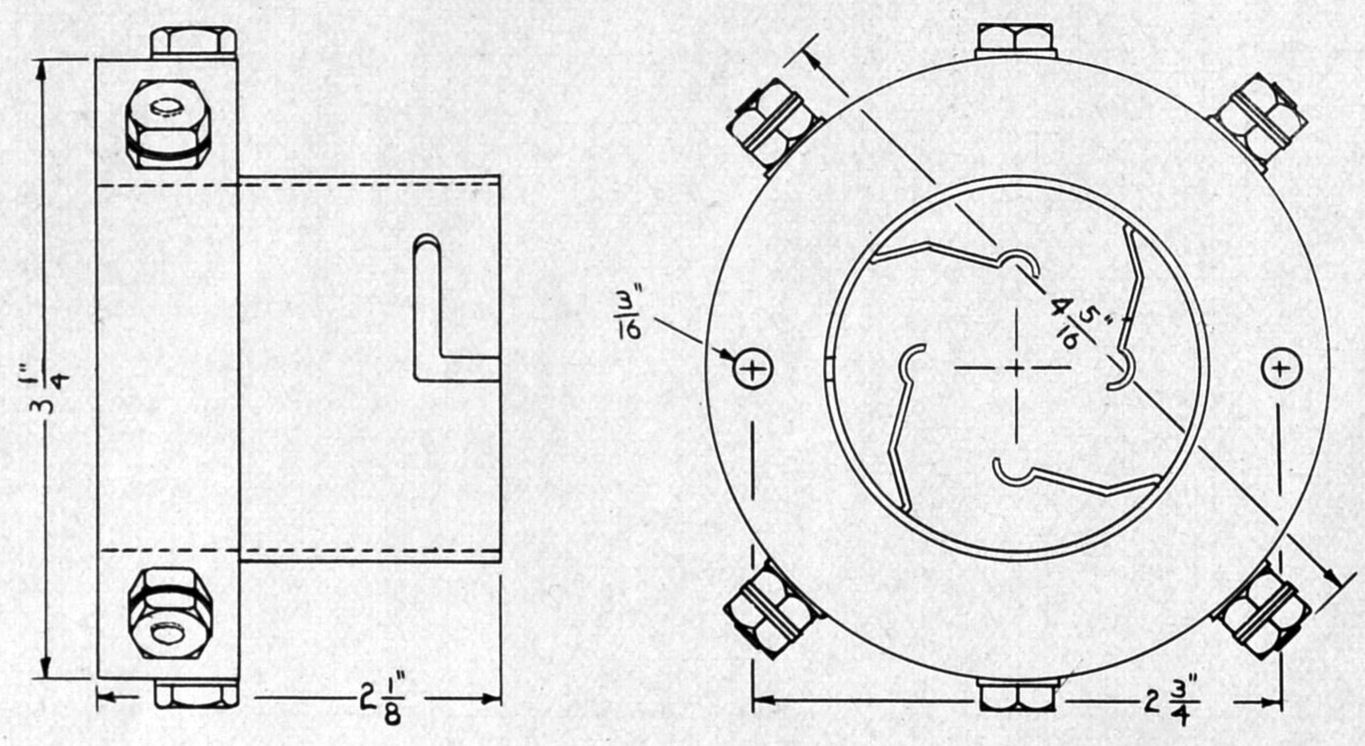

5-A-7 50 WATT SOCKET
National Company, Inc., Malden, Mass.

No. XM-50 is a bayonet-type socket for 50 watt tubes. It is a metal shell socket, to be used where voltages and frequencies are not high enough to warrant the use of the XC-50. The mounting base is Isolantite.

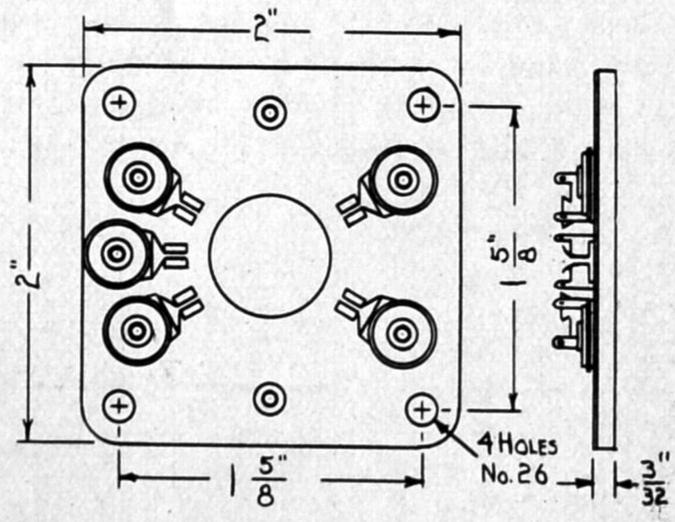

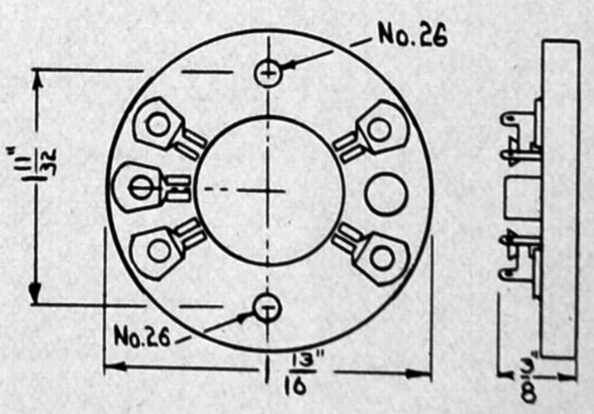

5-A-8 ACORN TUBE SOCKETS
National Company, Inc., Malden, Mass.

The XCA Socket on the right is designed for the triode acorn tube and is supplied with five contacts mounted on the Isolantite base. The XMA socket on the left is designed for the pentode acorn tube. The five contacts are insulated from the aluminum base and are by-passed directly to ground. The design of the contacts provides short leads and a current path nearly independent of tube position.

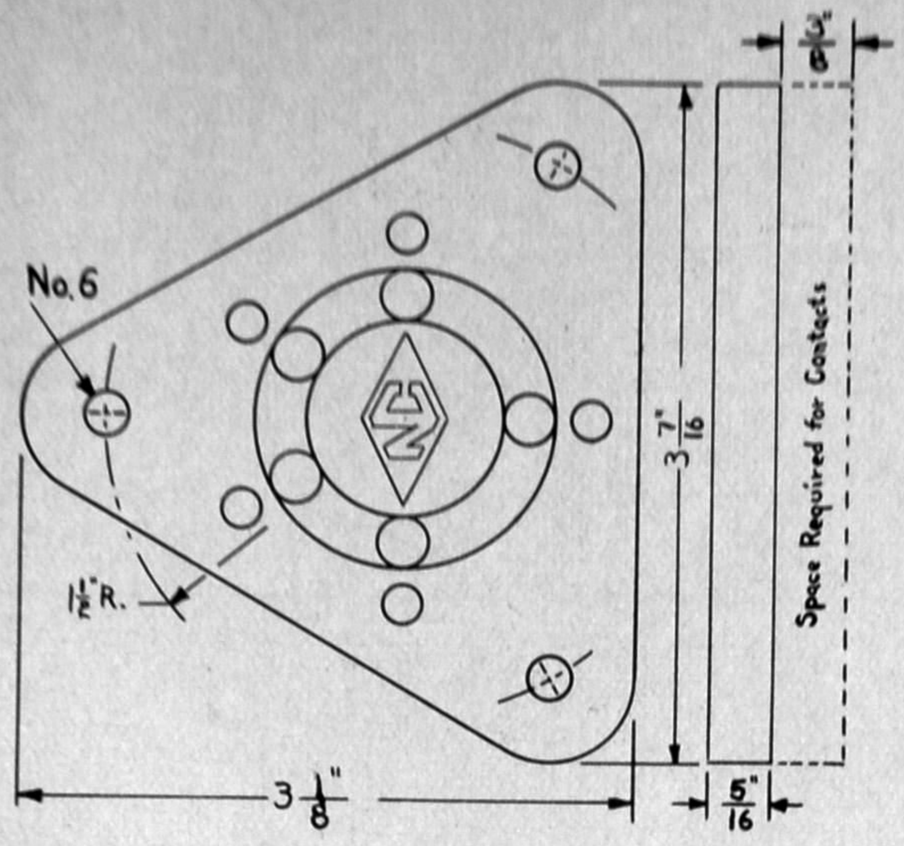

5-A-9 POWER PENTODE SOCKET

National Company, Inc., Malden, Mass.

The JX-100 is an Isolantite socket for the new RK-28 and RCA-803 power pentode tubes. It is equipped with large surface side wipe contacts reinforced with V shaped steel springs. The JX-100S is supplied with three mounting stand-off insulators of Isolantite. The dotted line in the drawing indicates the space required beneath the base for the contacts.

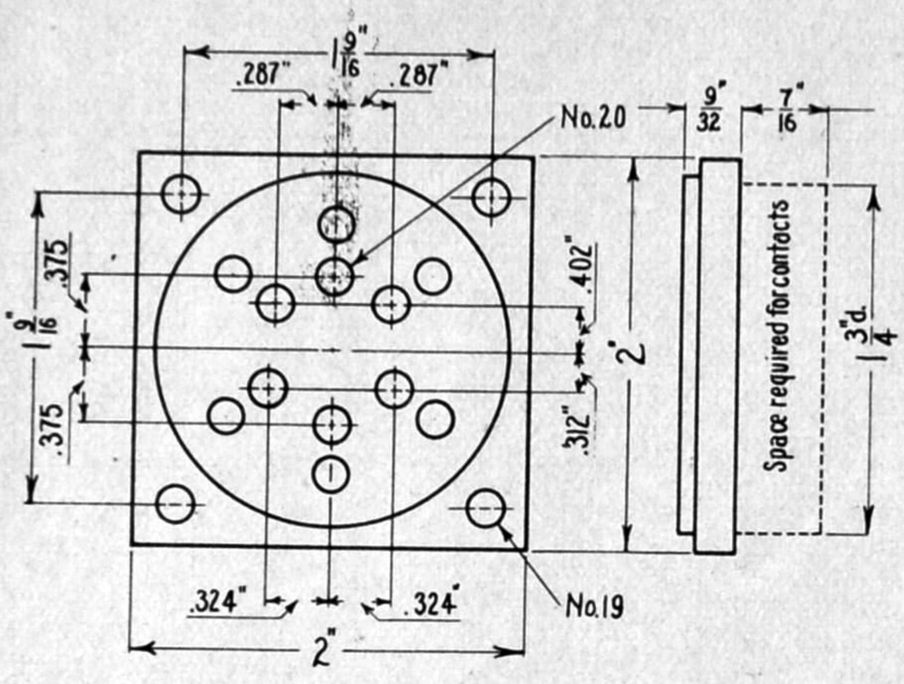

5-B-1 6-PRONG COIL SOCKET

NATIONAL COMPANY, Malden, Mass.

This socket, insulated by an Isolantite base, and fitted with contacts such as are used on the vacuum tube sockets, is intended for use with the XR-39 and XR-6 coil forms shown in this Section at 3-A-3 and 3-A-2, respectively. This socket is not intended for 6-prong vacuum tubes.

CRYSTAL HOLDERS

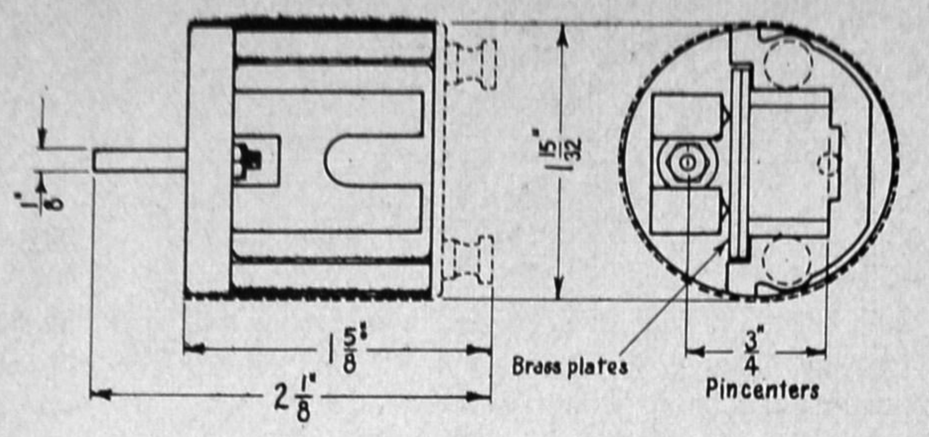

6-A-1 QUARTZ CRYSTAL HOLDER
NATIONAL COMPANY, *Malden, Mass.*

No. CH crystal holder comprises an R-39 Bakelite molding on which the parts are mounted, and a nickel-plated cover held in place by two thumb screws. Spring clips pressing on polished brass plates hold the crystal in a vertical position, where it can oscillate more freely. Two pins in the base, on ¾-in. centers, are provided for connections. When ordering a CH crystal holder, it is necessary to specify whether it is for a transmitting crystal or a resonator (single-signal) crystal.

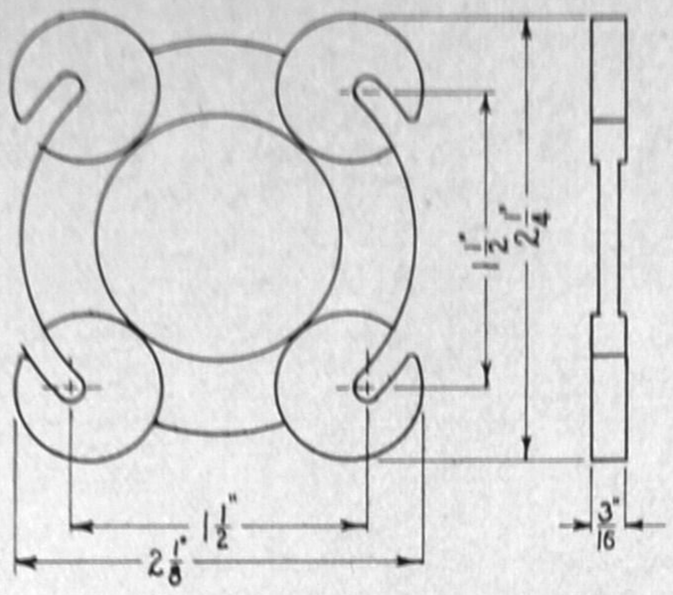

7-A-1 VICTRON TRANSPOSITION BLOCK
NATIONAL COMPANY, *Malden, Mass.*

No. AA-1 is a Victron transposition block designed to separate feeder wires 1½ in. This block is very light in weight, and the properties of the material make it admirably suited for high-efficiency insulation under the most severe weather conditions.

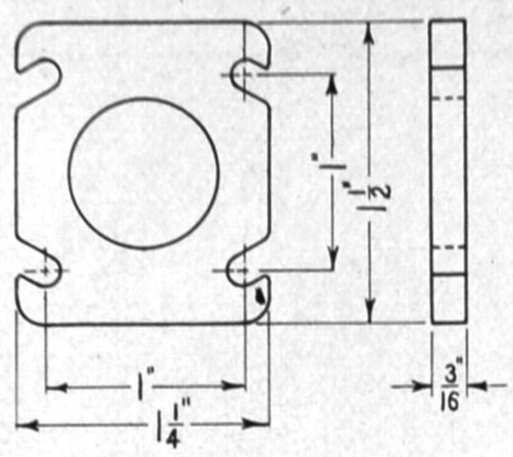

7-A-2 STEATITE TRANSPOSITION BLOCK
NATIONAL COMPANY, *Malden, Mass.*

No. AA-2 is a smaller transposition block of Steatite, designed to separate feeder wires by 1 in. Without being heavy, it is thick enough to give more mechanical strength than is ordinarily required.

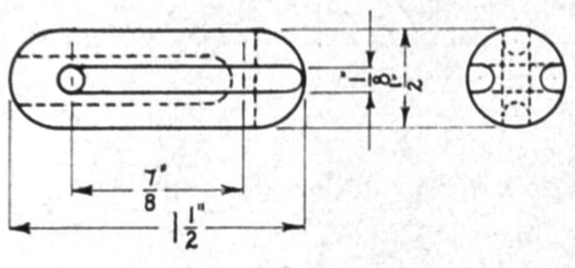

7-A-3 STEATITE AIRPLANE ANTENNA INSULATOR
NATIONAL COMPANY, *Malden, Mass.*

No. AA-5 is an airplane antenna insulator, although it has many applications in portable and mobile equipment. Loaded in compression it can stand substantially heavy loads. It is made of Steatite.

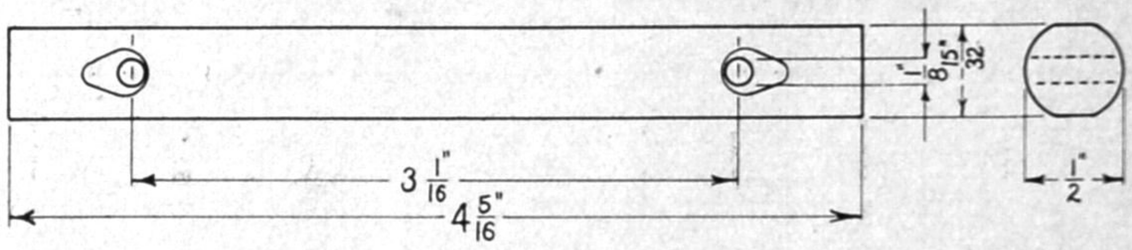

7-A-4 STEATITE ANTENNA INSULATOR
NATIONAL COMPANY, *Malden, Mass.*

No. AA-6 is a general-purpose antenna insulator. Made of Steatite, it is admirably suited to all kinds of insulators for short-wave and ultra-short-wave transmitters. The outer sides of the holes are rounded out so as not to cut the wires.

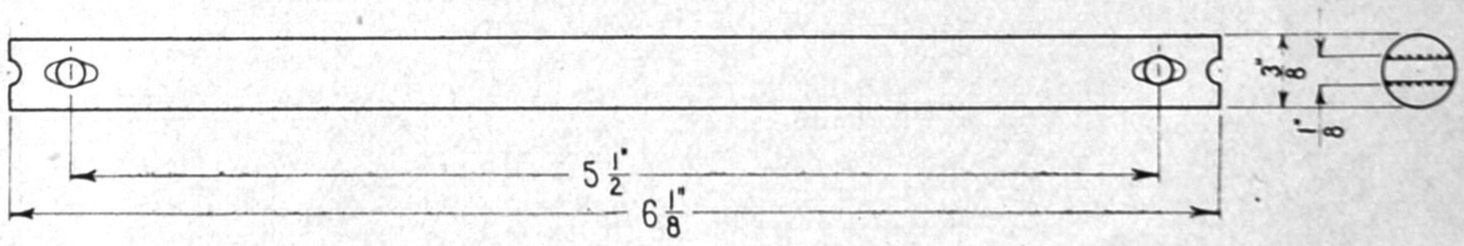

7-A-5 STEATITE ANTENNA SPREADER
NATIONAL COMPANY, *Malden, Mass.*

No. AA-3 is a Steatite antenna spreader, with holes spaced to separate the wires 5½ ins. While this is an expensive insulator, the reduction of losses resulting from the high efficiency of Steatite at high and ultra-high frequencies is ample justification for its use.

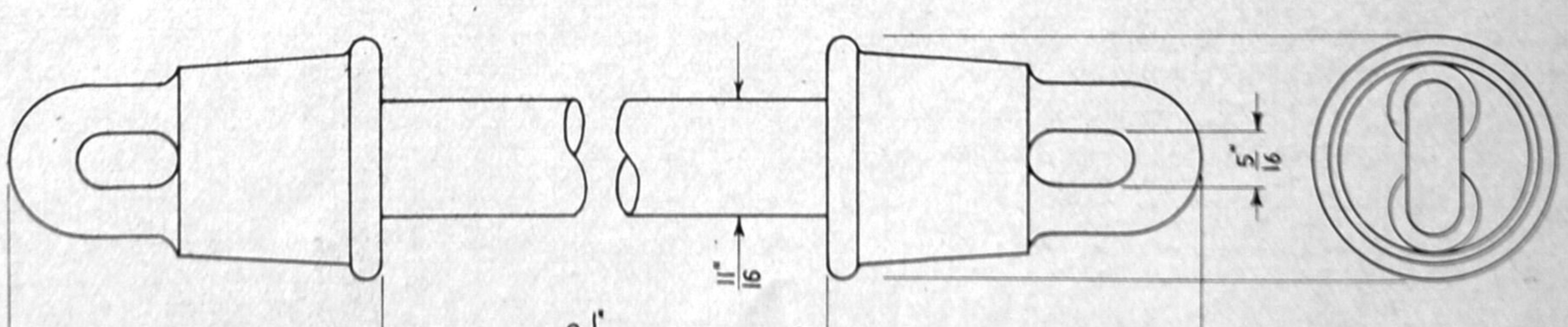

7-A-6 ISOLANTITE STRAIN INSULATOR
NATIONAL COMPANY, *Malden, Mass.*

No. AA-7 is a low-loss Steatite antenna strain insulator. This insulator can carry heavy loads, due to the strength of the insulating material and the design of the bronze end-fittings. The complete insulator weighs approximately one pound.

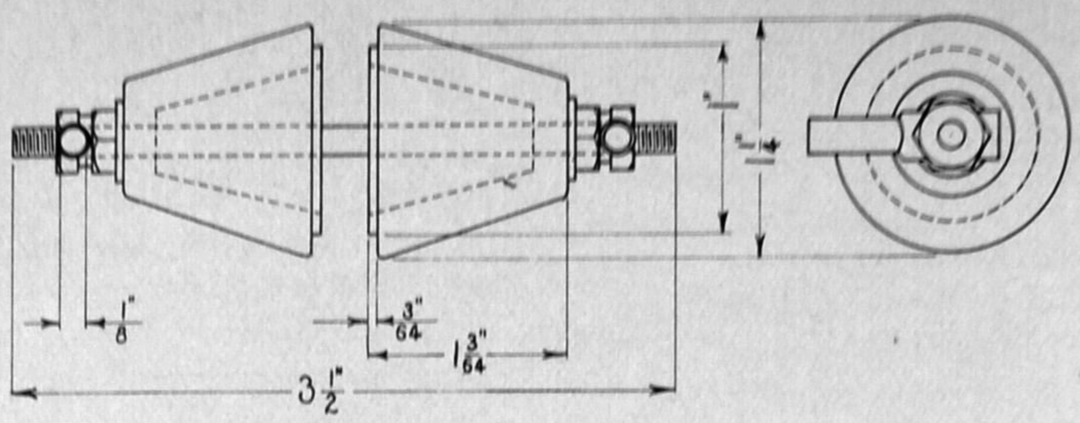

7-B-1 STEATITE H.F. BUSHING
NATIONAL COMPANY, Malden, Mass.

No. XS-1 is a small Steatite bushing designed to fit in a 1-in. hole. It lends itself to a wide variety of uses, such as bringing leads through chassis plates and shielding, or as an insulated lead and mounting for transmitter inductances. The rod, lugs, and nuts are furnished.

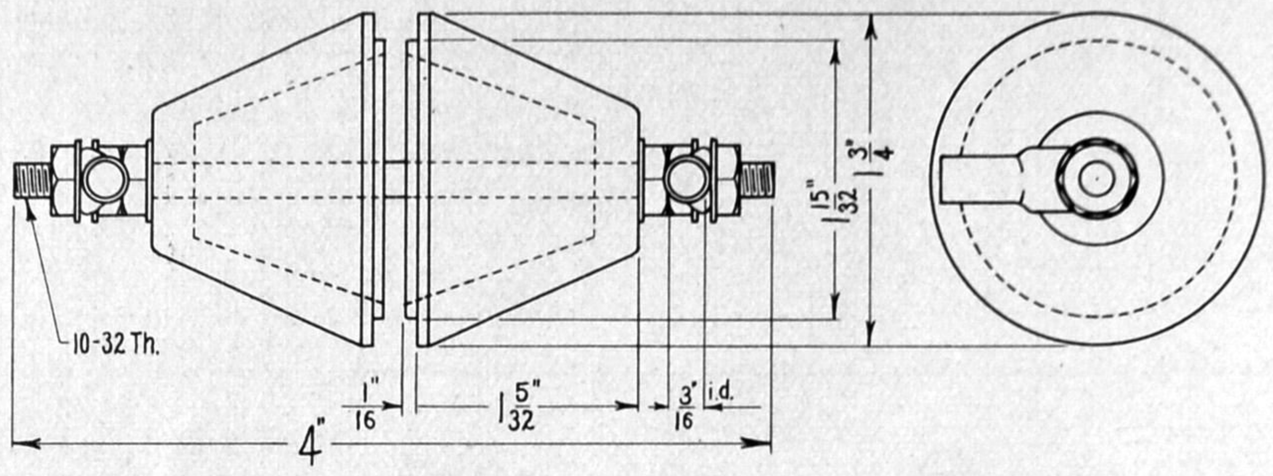

7-B-2 STEATITE H.F. BUSHING
NATIONAL COMPANY, Malden, Mass.

No. XS-2 is a Steatite bushing similar to XS-7, but it is made to fit in a 1½-in. hole. In addition to various applications to transmitter construction, this bushing can be used as an antenna lead-in insulator for low-power transmitters. In such a case, it should be set into a Bakelite plate, or a hole in the window-pane. Rod, lugs, and nuts are furnished.

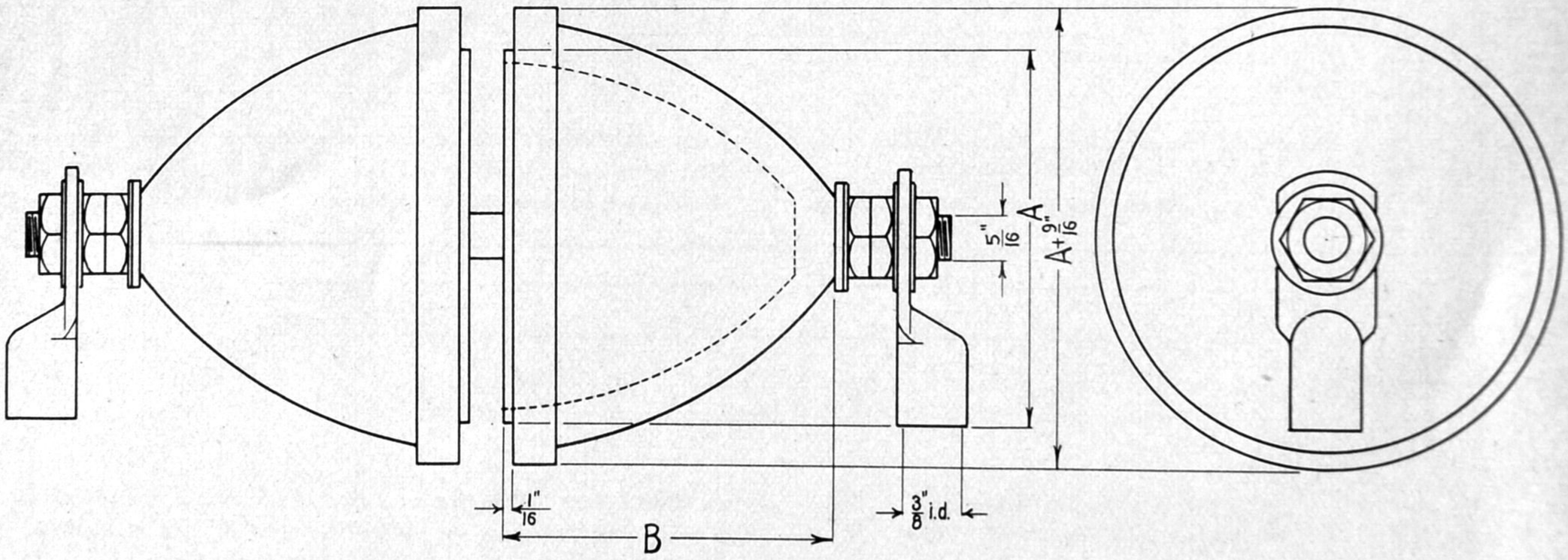

7-B-3 STEATITE HIGH-VOLTAGE H.F. BUSHING
NATIONAL COMPANY, Malden, Mass.

No. XS-3 and XS-4 are high-voltage Steatite bushings for use on high frequency and ultra-high frequency transmitters. They are made bowl-shape to conform with the lines of electrical stress. Rod, lugs and nuts are furnished. Following are the A and B dimensions:

No. XS–3	A = 2¾ ins.	B = 2 5/16 ins.
No. XS–4	A = 3¾ ins.	B = 2 25/32 ins.

7-B-4 STEATITE H.F. BUSHING
NATIONAL COMPANY, Malden, Mass.

No. XS–6 is a small Steatite bushing for insulating various parts in small transmitters and receivers. They are generally used in pairs, set into a ½-in. hole in the chassis or shielding.

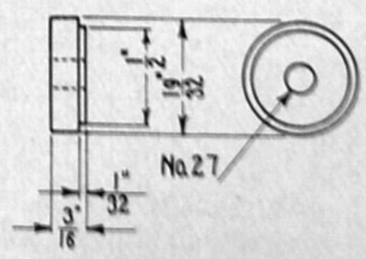

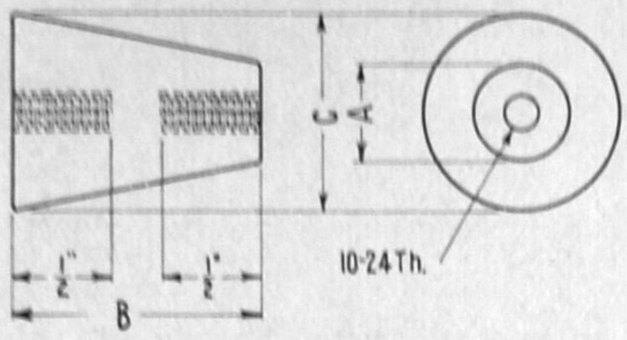

7-C-1 STEATITE STAND-OFF INSULATOR
NATIONAL COMPANY, Malden, Mass.

No. GS-5, GS-6, and GS-7 are Steatite stand-off insulators for mounting parts in high-frequency circuits. The dimensions are as follows:

GS-5 A = 1/2 in. B = 1 1/4 ins. C = 1 in. Holes, 8-32 thread
GS-6 A = 5/8 in. B = 2 ins. C = 1 1/8 ins. Holes, 10-24 thread
GS-7 A = 3/4 in. B = 3 ins. C = 1 1/2 ins. Holes, 10-24 thread

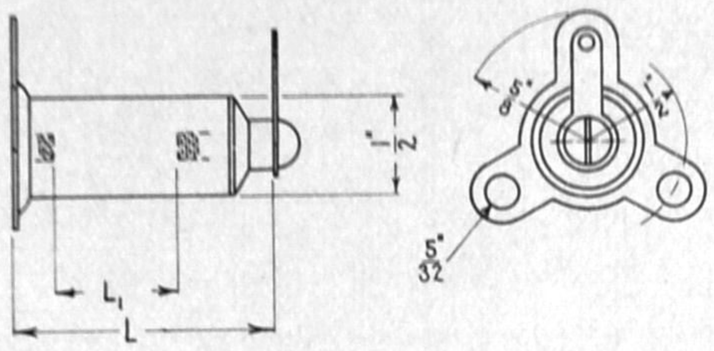

7-C-2 STEATITE STAND-OFF INSULATOR
NATIONAL COMPANY, Malden, Mass.

No. GS-1 and GS-2 are Isolantite stand-off insulators which are used for supporting connections and are frequently built into the design of various devices, such as solenoid chokes. The L and L dimensions are:

GS-1	L = 1 5/16 ins.	L_1 = 5/8 in.
GS-2	L = 2 13/16 ins.	L_1 = 2 1/8 ins.

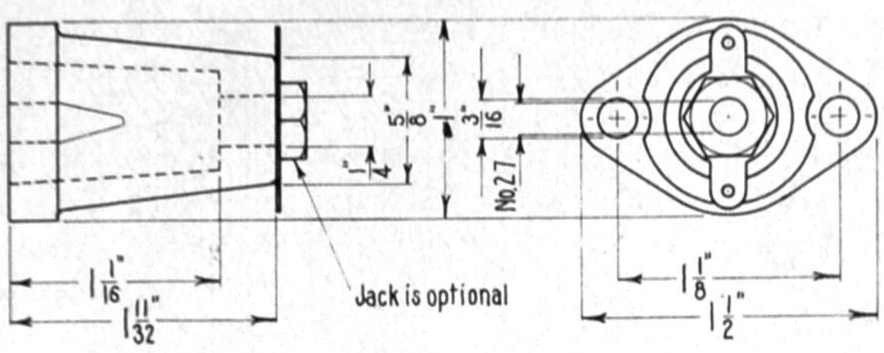

7-C-3 STEATITE STAND-OFF INSULATOR
NATIONAL COMPANY, Malden, Mass.

No. GS-8 and GS-9 are Steatite stand-off insulators intended particularly for plug-in transmitter inductances. GS-8 is the plain Steatite insulator, while GS-9 is fitted with a jack, as shown in the drawing opposite.

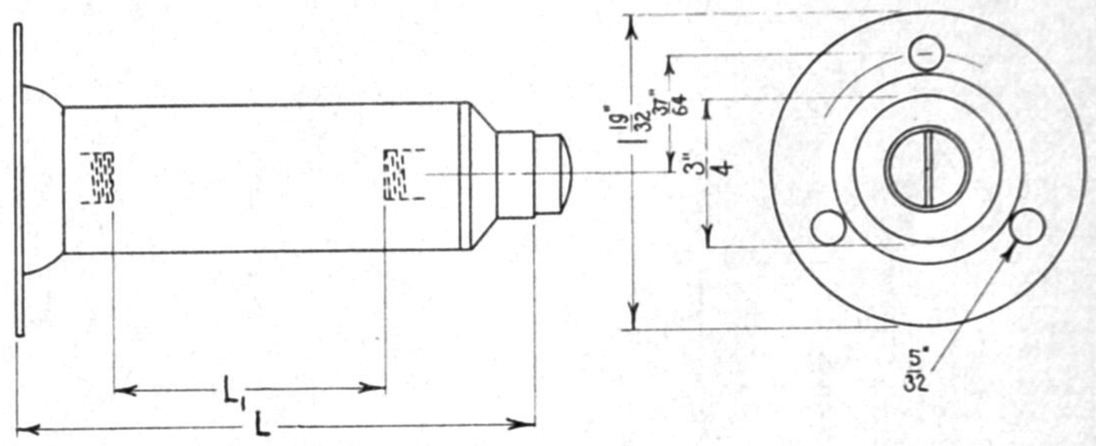

7-C-4 STEATITE STAND-OFF INSULATOR
NATIONAL COMPANY, Malden, Mass.

No. GS-3 and GS-4 are heavy Isolantite stand-off insulators for supporting wiring and parts in larger transmitters. Both types are 3/4 in. in diameter, heavy enough to carry substantial loads. The L and L_1 dimensions are:

GS-3	L = 2 5/8 ins.	L_1 = 1 3/8 ins.
GS-4	L = 4 5/8 ins.	L_1 = 3 3/8 ins.

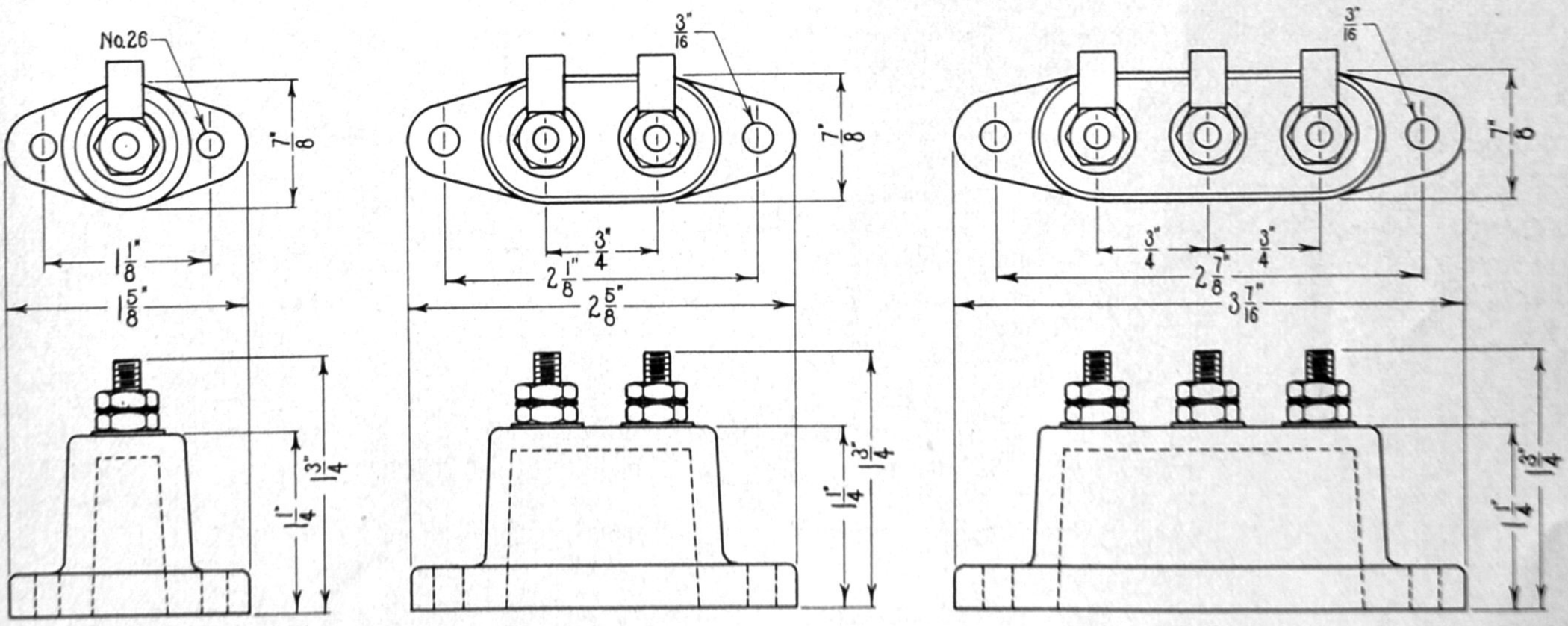

7-C-5 SINGLE PORCELAIN STAND-OFF INSULATOR
GENERAL RADIO CO., Cambridge, Mass.

No. 630-A is the single insulator, of brown glazed porcelain illustrated above. Wood screws and lead washers are supplied with it.

7-C-6 DOUBLE PORCELAIN STAND-OFF INSULATOR
GENERAL RADIO CO., Cambridge, Mass.

No. 630-B is the double insulator illustrated above. Like the others of this group, it is made of brown glazed porcelain, making it suitable for inside or outside installations. Wood screws are provided, with lead washers, to prevent breakage when the insulator is mounted.

7-C-7 TRIPLE PORCELAIN STAND-OFF INSULATOR
GENERAL RADIO CO., Cambridge, Mass.

No. 630-C is the triple porcelain insulator illustrated above. Wood screws and lead washers are supplied with it.

7-D-1 BAKELITE-INSULATED COUPLING

NATIONAL COMPANY, Malden, Mass.

No. TX-10 is an insulated coupling for ¼-in. shafts, suitable for all light loads. The flexible disc, of canvas Bakelite, provides ample freedom of movement, with no backlash.

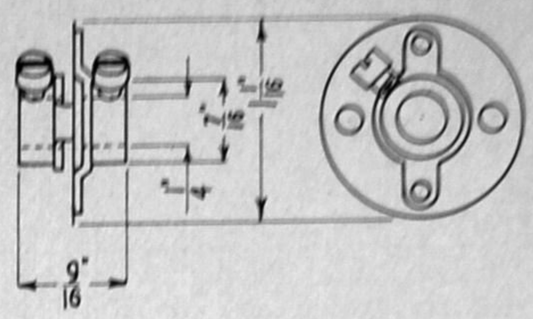

7-D-2 ISOLANTITE-INSULATED COUPLING

NATIONAL COMPANY, Malden, Mass.

No. TX–1 and TX–2 are long, Isolantite-insulated flexible couplings for ¼-in. shafts. The L and L_1 dimensions are:

TX-1	L = 1 in.	L_1 = ¼ in.
TX-2	L = 2½ ins.	L_1 = 1¾ ins.

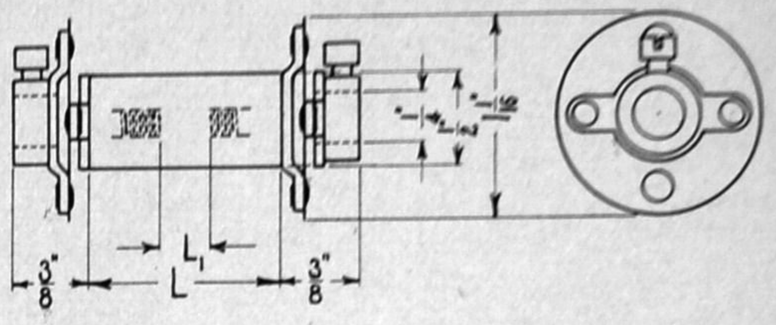

7-D-3 ISOLANTITE–INSULATED COUPLING

NATIONAL COMPANY, Malden, Mass.

No. TX-9 coupling, also for ¼-in. shafts, is preferable when high-frequency insulation is a factor. This coupling has a Steatite disc carried on opposite springs which are riveted to brass shaft collars.

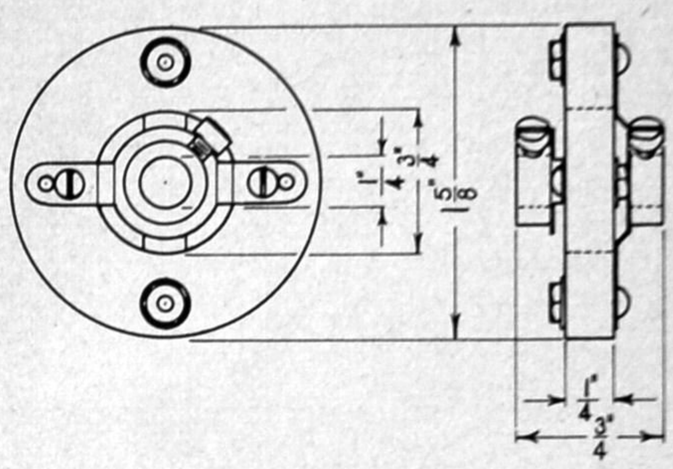

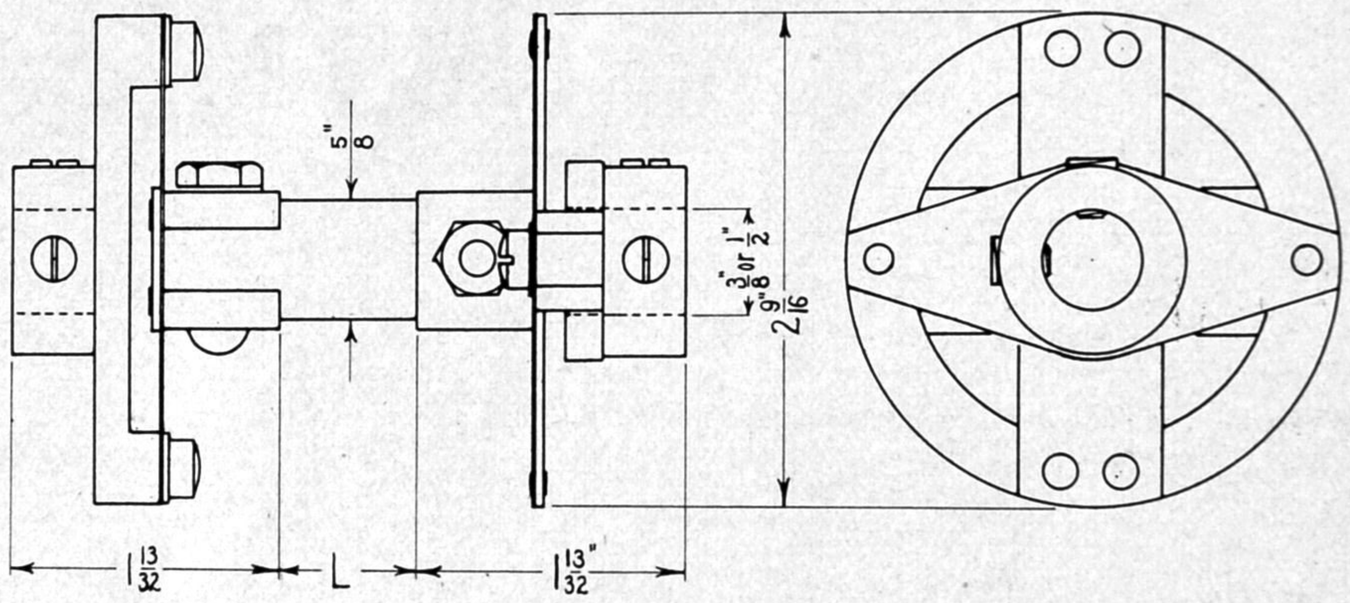

7-D-4 HIGH–VOLTAGE ISOLANTITE COUPLING

NATIONAL COMPANY, Malden, Mass.

No. TX-3, TX-5, and TX-7 are Isolantite-insulated flexible couplings designed to withstand high voltages and to carry the heavy condensers used for high-power transmitters. Note that the Isolantite bar to which the fittings are attached is of square cross-section. Dimension L, for the three types, is:

TX-3	L = 11/16 in.
TX-5	L = 2 1/16 ins.
TX-7	L = 4 9/16 ins.

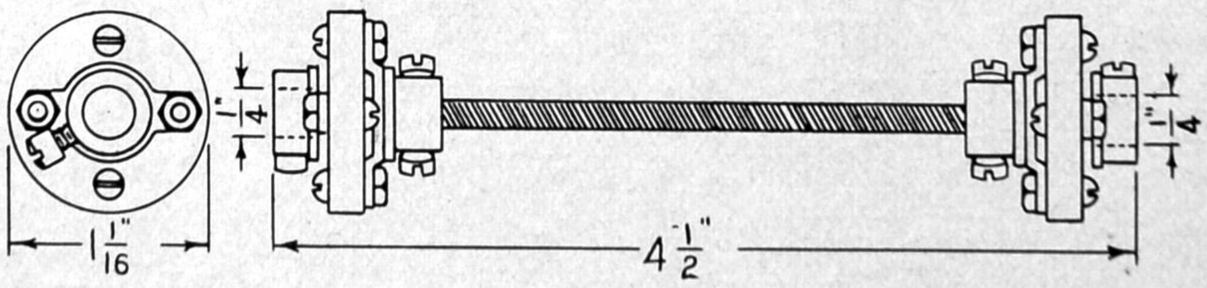

7-D-5 ISOLANTITE INSULATED COUPLING

National Company, Inc., Malden, Mass.

No. TX-12 is an Isolantite insulated shaft coupling providing means of driving offset shafts or shafts at angles up to 90 degrees. The drive is through a flexible shaft of high quality that reduces torsional deflections to a negligible amount. No. TX-11 has the same mechanical advantages but is not supplied with Isolantite insulation.

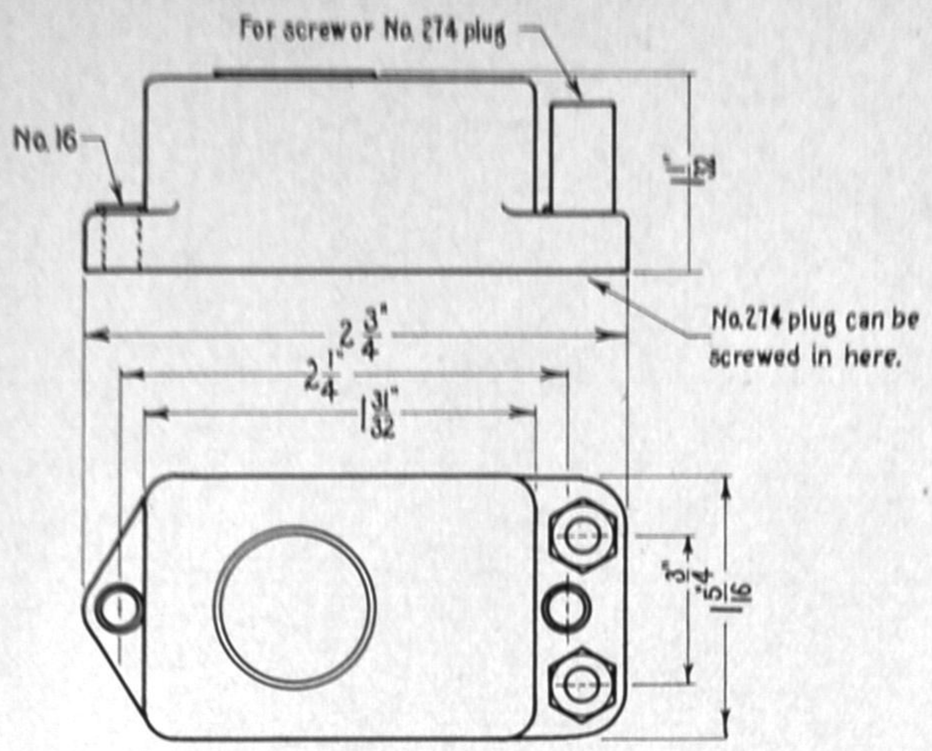

8-A-1 PRECISION RESISTANCE STANDARD

GENERAL RADIO CO., Cambridge, Mass.

No. 500 resistance units comprise a precision resistance card, equal in quality to those in the No. 510 GENERAL RADIO decade resistance units, mounted in a Bakelite case. The 1-ohm unit is adjusted to .25% accuracy, and the higher values to .1% accuracy. These units dissipate 1 watt. There is no serious frequency error below 50 k.c. Information concerning errors at higher frequencies is available from the manufacturers.

The temperature coefficient is .002% per degree C. except in the 10,000-ohm unit, which shows .013% per degree C. at room temperature. Ayrton-Perry windings are used for units below 1,000 ohms, while unifilar windings on mica cards are provided for 1,000 and 10,000 ohms. Following are the standard values.

No.	Ohms	Max. Mils	No.	Ohms	Max. Mils
500-A	1	1,000	500-F	500	45
500-B	10	310	500-G	600	40
500-C	50	140	500-H	1,000	30
500-D	100	100	500-J	10,000	10
500-E	200	70			

Terminals are arranged for plain screws, or they can be used as plugs and jacks, as they are spaced 3/4 in. in accordance with standard practice on GENERAL RADIO instruments.

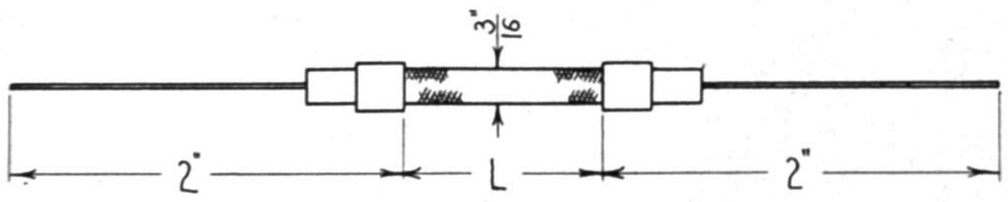

8-A-2 FLEXIBLE FIXED RESISTOR

ELECTRAD, INC., New York City

No. HG flexible resistors comprise a wire-wound element covered with flexible tubing. This winding, with the soldered leads, makes a noiseless resistor suited for replacements, and for use where the resistor is made a part of the wiring.

1/2 Watt, L = 1"		Ohms	Mils	Ohms	Mils
Ohms	Mils	500	32	200	71
5	316	600	29	225	66
10	224	700	27	250	63
15	183	750	26	300	58
25	140	800	25	350	53
40	112	850	24	400	52
50	100	900	23.6	450	47
60	91	1,000	22.4	500	45
75	78	No. IG, 1 Watt, L = 2"		600	41
100	71	5	445	700	38
125	63	10	315	750	37
150	58	15	260	800	35
200	50	25	200	850	34
225	47	40	160	900	33
250	45	50	140	1,000	31
300	41	60	129	1,250	28
350	38	75	115	1,500	26
375	37	100	100	1,600	25
400	36	125	89	1,750	24
450	34	150	81	2,000	22

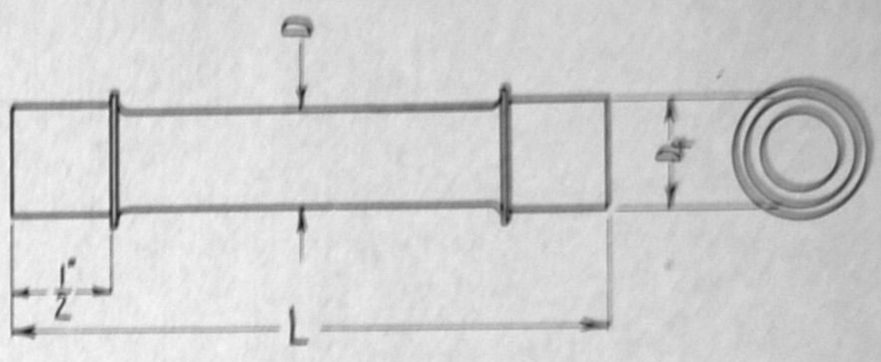

8-A-3 FERRULE TYPE VITREOUS RESISTORS

ELECTRAD, INC., New York City

Ferrule type resistors, mounted in fuse clips, are becoming increasingly popular for transmitter and many special purposes, particularly because of the ease of mounting and replacing, and the convenience of mounting spares.

The table below gives the ELECTRAD ratings and dimensions for maximum resistance values. Standard values are not given, for these resistors are generally supplied according to specifications. Details as to temperature rise and mounting can be obtained from the manufacturers.

No.	Watts	L	D	D_f	Max. Ohms
1-FH	10	2 3/8"	1/2"	9/16"	5,000
2-FH	20	3"	1/2"	9/16"	8,250
3.5-FH	35	4"	1/2"	9/16"	10,000
4-FH	40	5 1/8"	3/4"	13/16"	15,000
6-FH	60	4 1/2"	1"	13/16"	30,000
10-FH	100	7 1/2"	1 1/16"	1 1/8"	35,000
20-FH	200	9 3/4"	1 1/8"	1 1/8"	70,000

8-A-4 FERRULE TYPE VITREOUS RESISTORS

GENERAL ELECTRIC CO., Schenectady, N.Y.

Ratings of GENERAL ELECTRIC ferrule type resistors are presented in a slightly different way. The standard wattage rating listed as "ventilated, enclosed" is based conservatively on four watts per square inch of surface. When a unit is mounted in free air with ample provision for radiation, it may be operated at six watts per square inch.

In determining the wattage capacity, it is necessary to take into consideration the form of housing, number of units mounted close together, the nature and proximity of other apparatus, and the provision for proper radiation.

Special units can be furnished with lower or higher resistance. On all units, the manufacturing allowance is 5 per cent below and 10 per cent above the listed resistance rating, altho closer tolerances can be maintained if required.

Open ratings should not be used if free ventilation is in any way restricted. Open ratings are based on single units mounted vertically. Resistors mounted horizontally show slightly greater temperature rise, due to decreased air circulation thru the vitreous tube.

Watts Vent., Enc.	Watts Open	L	D	Ohms Standard	Ohms Special
15	22	2 1/2"	3/4"	1 to 800	5,000
38	57	5 1/8"	3/4"	3 to 3,000	18,000
55	85	5 1/2"	1"	3 to 4,000	27,000
80	122	7 1/2"	1"	5 to 5,000	40,000

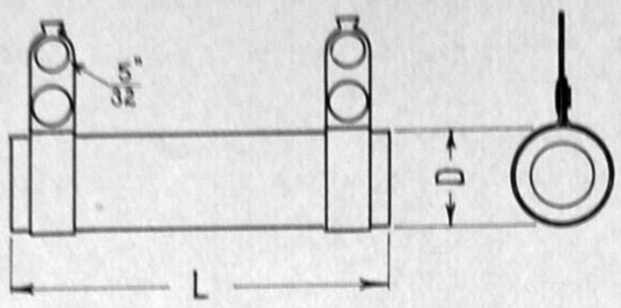

8-A-5 ENAMELED RESISTORS

ELECTRAD, INC., New York City

The resistors listed below are wound with wire of low temperature coefficient on a ceramic tube. The resistor is then enameled and baked. Many engineers consider this baked enamel coating superior to a vitreous coating when resistors are subject to high humidity. Ratings are based on a temperature rise to 250° C. (450° F.) when suspended in 1 ft. free air, provided the surrounding air is not over 40° C. (104° F.). Accuracy ± 5%.

10 Watts L = 1¾" D = ⅜"

Ohms	Mils	Ohms	Mils	Ohms	Mils
1	3,150	50	450	1,500	81
2	2,200	75	360	2,000	70
3	1,800	100	315	2,500	63
4	1,600	125	280	3,000	56
5	1,400	150	260	4,000	50
7.5	1,150	200	220	5,000	45
10	1,000	250	200	6,000	41
12	900	300	180	7,500	36
15	800	400	158	10,000	31
20	700	500	141	12,000	16
25	630	600	130	15,000	14
30	570	750	115	20,000	12
35	530	1,000	100	25,000	11
40	500	1,200	91	Pigtail terminals	

20 Watts L = 2" D = ½"

Ohms	Mils	Ohms	Mils	Ohms	Mils
5	2,000	1,000	141	6,000	57
10	1,450	1,100	135	7,000	53
25	895	1,200	129	7,500	51
50	633	1,250	126	8,000	50
75	517	1,500	115	10,000	44
100	447	1,750	107	12,500	40
150	375	1,850	104	15,000	37
200	316	2,000	100	25,000	15
250	282	2,250	94	35,000	13
300	258	2,400	91	40,000	12
350	238	2,500	89	50,000	11
400	224	2,750	85	60,000	10
500	200	3,000	81	70,000	9
650	176	3,500	75	75,000	9
700	169	4,000	71	80,000	8.5
750	163	4,500	66	90,000	8
800	158	5,000	63	100,000	7.5
850	153	Pigtail terminals only are supplied			

50 Watts L = 4" D = ¾"

Ohms	Mils	Ohms	Mils	Ohms	Mils
10	2,230	2,500	141	12,500	63
20	1,581	3,000	129	15,000	57
50	1,000	4,000	111	17,500	53
100	707	5,000	100	20,000	50
250	447	6,000	91	25,000	44
500	316	7,000	84	30,000	22
700	267	7,500	81	40,000	19
750	258	8,000	79	50,000	17
1,000	223	9,000	74	60,000	15
1,500	182	10,000	70	75,000	14
2,000	158	12,000	65	100,000	12
2,250	149	Lug terminals, as in drawing, and bracket			

100 Watts L = 7" D = 1"

Ohms	Mils	Ohms	Mils	Ohms	Mils
25	2,000	1,500	258	20,000	70
50	1,414	2,000	223	25,000	63
75	1,155	2,500	200	30,000	57
100	1,000	3,000	182	40,000	50
150	815	5,000	141	50,000	44
250	632	7,500	115	60,000	40
500	447	10,000	100	75,000	36
750	365	15,000	81		
1,000	316	Lug terminals, as in drawing, and brackets			

200 Watts L = 10½" D = 1¼"

Ohms	Mils	Ohms	Mils	Ohms	Mils
25	2,830	1,500	365	20,000	100
50	2,000	2,000	316	25,000	90
75	1,635	2,500	283	30,000	81
100	1,414	3,000	258	40,000	70
150	1,155	5,000	200	50,000	63
250	894	7,500	163	60,000	57
500	632	10,000	141	80,000	50
750	515	15,000	115	100,000	44
1,000	447	Lug terminals, as in drawing, and brackets			

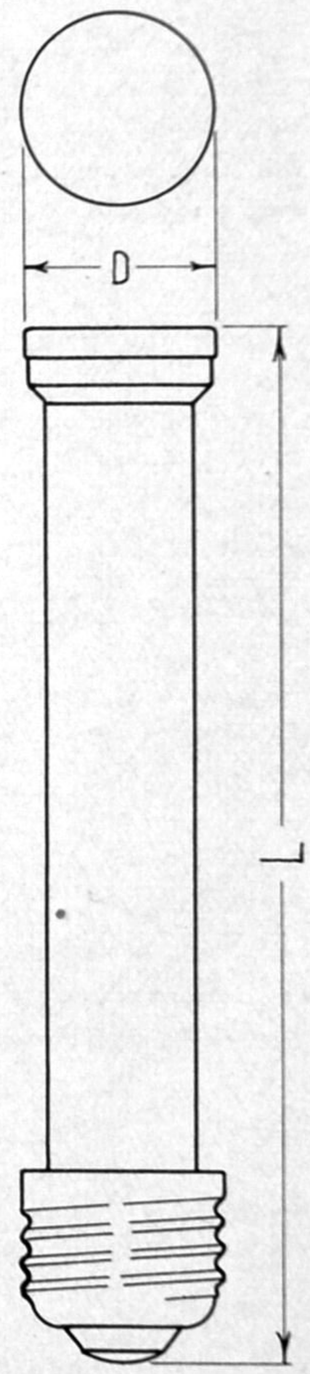

8-A-6 VITREOUS EDISON-BASE RESISTORS

ELECTRAD, INC., New York City

Resistors in this series are vitreous-coated, and mounted on standard Edison bases. Accuracy ± 5%.

60 W. L = 5⅜" D = 1"

Ohms	Mils	Ohms	Mils	Ohms	Mils
50	1,095	250	490	50	1780
62	980	500	336	75	1460
75	890	1,000	245	100	1260
90	815			150	1030
100	775	160 W. L = 9½" D = 1⅜"		200	890
125	690	Ohms	Mils	300	730
200	545	10	4,000	500	545
		25	2,520	1,000	400

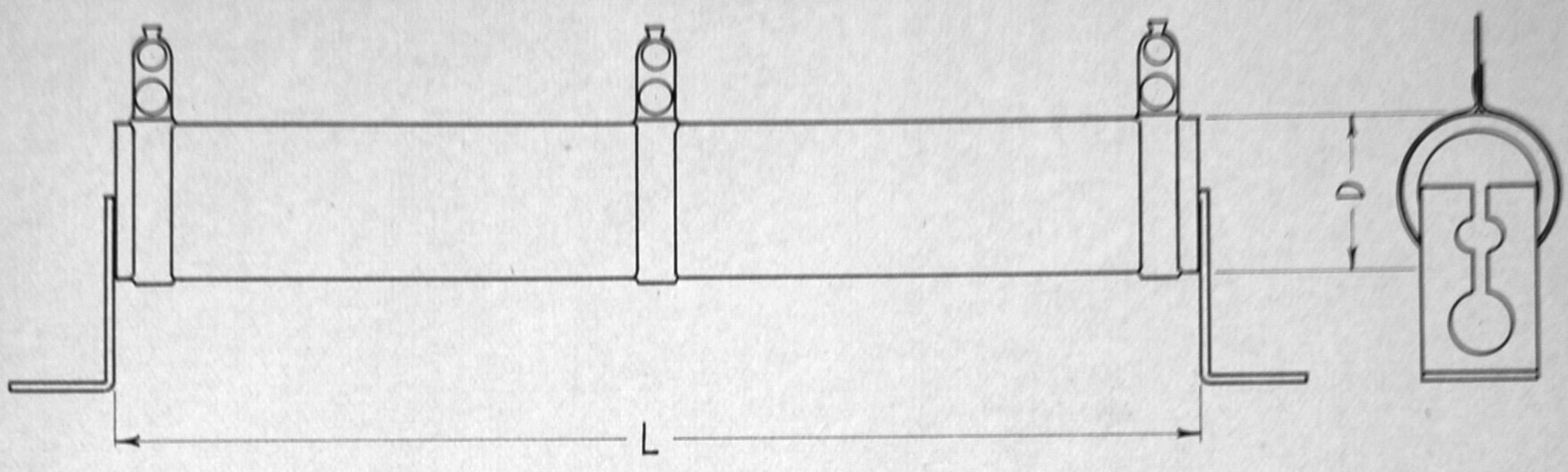

8-B-1 TRANSMITTER GRID LEAK

ELECTRAD, INC., New York City

Two types of center-tapped grid leak resistors are listed opposite. These units are vitreous-coated on a ceramic tube. Removable mounting brackets are supplied. Accuracy ± 5%.

100 W. L = 7″ D = 1″					
Ohms	Mils	Ohms	Mils	Ohms	Mils
5,000	140	60,000	40	20,000	100
10,000	100	75,000	36	25,000	90
15,000	81	200 W. L = 10½″ D = 1¼″		30,000	81
25,000	63	Ohms	Mils	50,000	63
30,000	57	5,000	200	60,000	57
50,000	44	10,000	141	80,000	50
		15,000	115	100,000	44

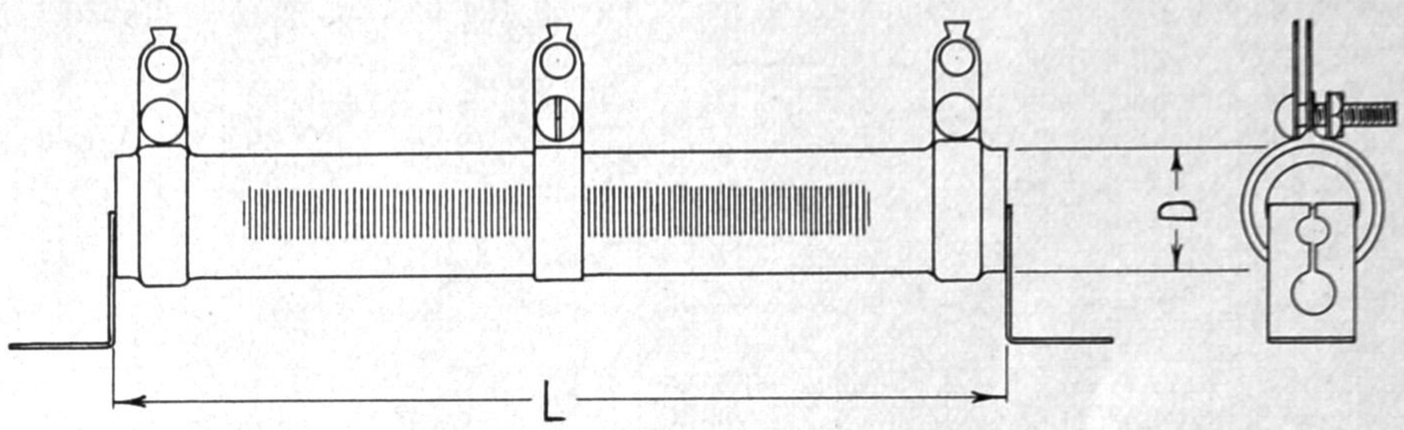

8-B-2 ADJUSTABLE VITREOUS RESISTORS

ELECTRAD, INC., New York City

Many circuits require adjustable resistors in order that maximum efficiency can be obtained. The type illustrated above is excellent for such purposes. These resistors are wound on ceramic tubes and are vitreous-coated. Part of the winding, however, altho baked firmly against the tube, is sufficiently exposed to make contact with an adjustable ring terminal. For method of rating, see 8-A-5.

30 Watts L = 2½″ D = ⅝″

Ohms	Mils	Ohms	Mils	Ohms	Mils
1	5,460	200	385	3,500	92
3	3,160	250	345	4,000	86
5	2,450	500	245	5,000	77
10	1,730	750	200	6,000	70
15	1,410	800	193	7,500	63
25	1,090	1,000	173	10,000	54
50	770	1,500	141	12,000	50
75	630	2,000	122	15,000	44
100	545	2,500	109	20,000	38
150	445	3,000	100	25,000	34

50 Watts L = 4½″ D = ⅝″

Ohms	Mils	Ohms	Mils	Ohms	Mils
5	3,300	750	270	8,000	82
10	2,340	800	260	10,000	74
25	1,480	1,000	234	12,000	67
50	1,000	1,500	190	15,000	60
75	850	2,000	165	20,000	50
100	740	2,500	148	25,000	45
150	600	3,000	135	30,000	43
200	520	4,000	117	40,000	37
250	465	5,000	104	50,000	34
500	330	7,500	85		

75 Watts L = 6½″ D = ⅝″

Ohms	Mils	Ohms	Mils	Ohms	Mils
10	2,730	1,500	223	25,000	55
15	2,230	2,000	190	30,000	50
25	1,730	2,500	173	35,000	47
50	1,220	3,500	146	40,000	43
100	865	5,000	122	45,000	41
250	545	7,500	100	50,000	39
300	500	10,000	86	60,000	35
500	387	15,000	70	80,000	31
750	316	20,000	61	100,000	27
1,000	270				

100 Watts L = 7″ D = 1″

Ohms	Mils	Ohms	Mils	Ohms	Mils
1,000	315	8,000	110	35,000	53
2,000	220	10,000	100	40,000	50
3,000	180	15,000	81	50,000	44
4,000	155	20,000	70	60,000	40
5,000	140	25,000	63	75,000	36
6,000	125	30,000	57		

200 Watts L = 10½″ D = 1¼″

Ohms	Mils	Ohms	Mils	Ohms	Mils
500	632	5,000	200	50,000	63
1,000	447	10,000	141	60,000	57
1,500	365	20,000	100	70,000	53
2,000	316	25,000	90	75,000	51
2,500	283	30,000	81	80,000	50
3,000	258	35,000	75	100,000	44

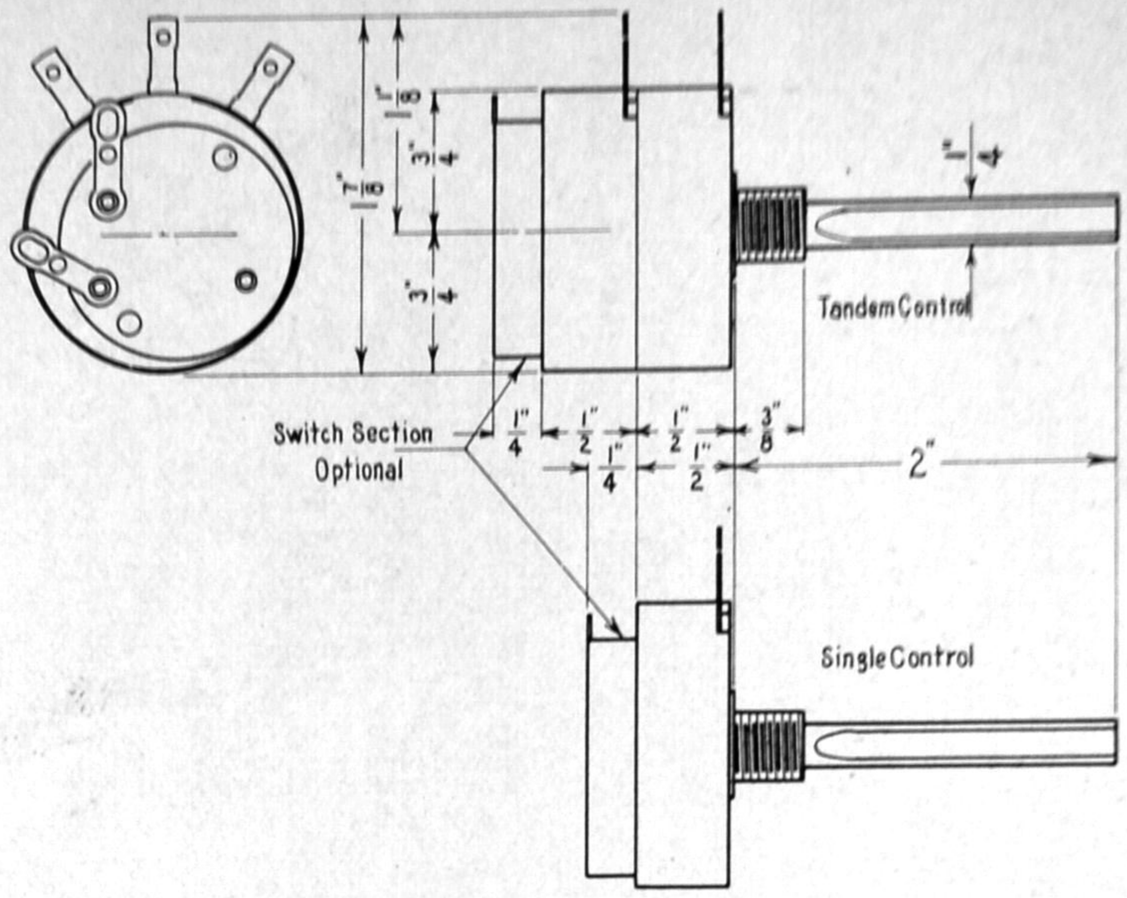

8-C-1 VOLUME CONTROL

ELECTRAD, INC., New York City

The volume control illustrated above is enclosed in a Bakelite case. The resistance element is of graphite, baked at high temperature on the outer surface of a Bakelite ring. Against it works a highly polished alloy shoe, carried on a long bronze tension spring.

Various resistance values and tapers are available, to suit the particular purpose and circuit in which the volume control is to be used. Complete information can be obtained from the manufacturers. Controls are available with maximum resistance values ranging from 10 to 1,000,000 ohms.

As the drawing shows, the control can be furnished with a power switch if required. Also, two or more controls can be used in tandem, with the same or different resistance values and tapers.

8-C-2 VOLUME CONTROL

GENERAL RADIO COMPANY, Cambridge, Mass.

No. 653 volume control is intended specially for mixer circuits where noise-level restrictions are particularly severe. The frame of this volume control is of molded Bakelite. The disc at the rear, carrying the contact points and also pins on which the resistance elements are wound.

The ladder-type network employed has the advantage of requiring only one sliding contact. Attenuation is linear with the dial setting, and is adjustable from 0 db. to complete cut-off. The attenuation from 0 to 45 db. is in steps of approximately ¾ db., since the switch arm bridges two contacts, while above 45 db. the rate increases rapidly to "infinity" which is about 120 db. with the usual type of mixer circuit. There is an initial insertion loss of 6 db.

Three impedance values are available: No. 653–MA of 50 ohms, No. 653–MB of 200 ohms, and No. 653–MC of 500 ohms.

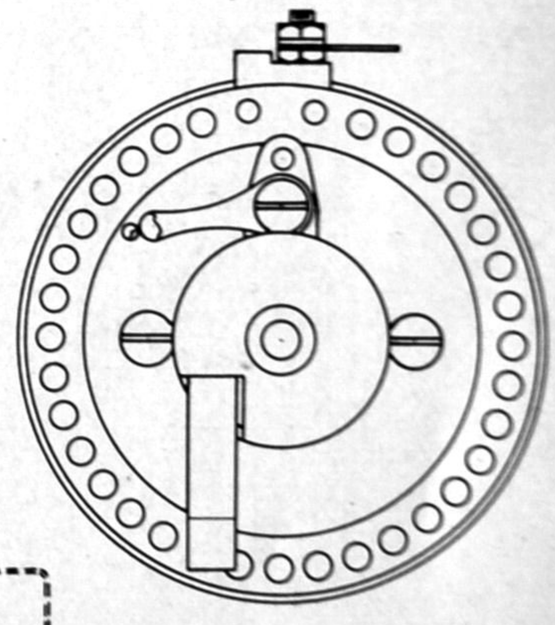

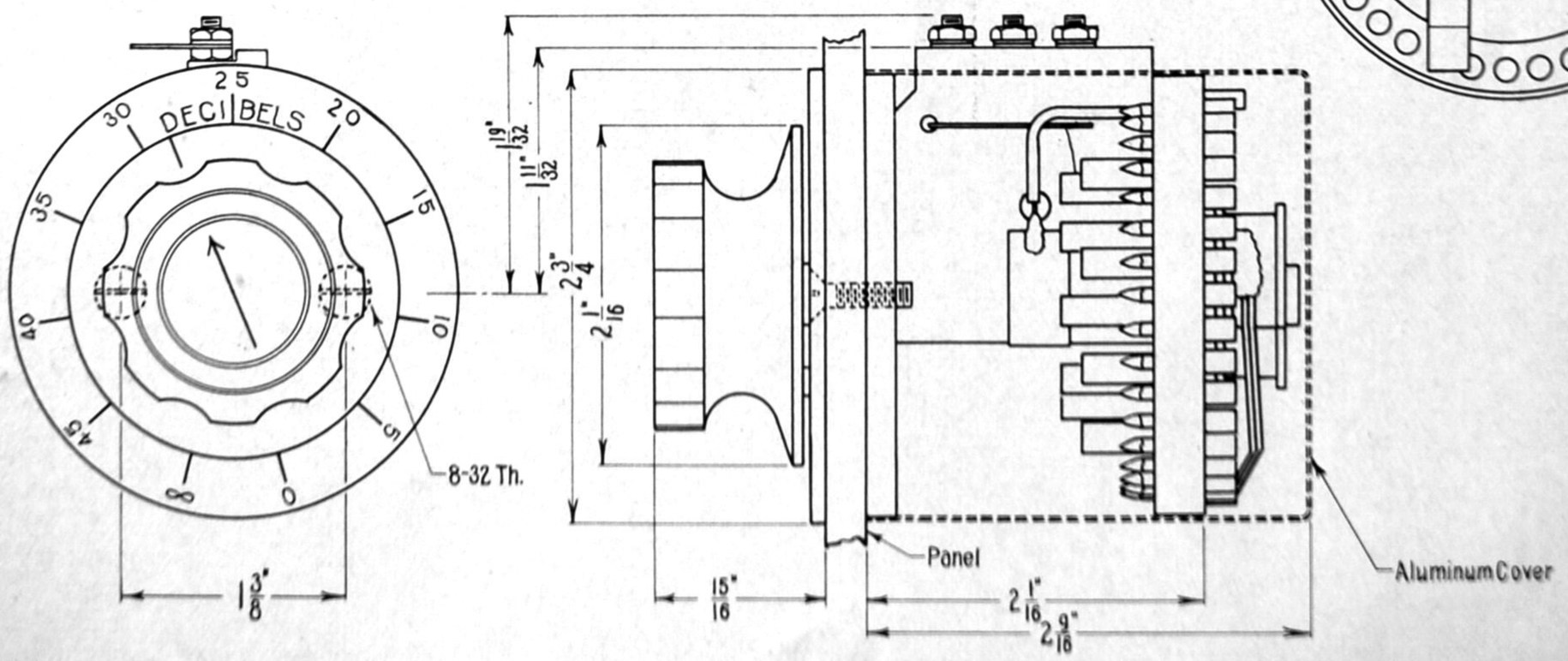

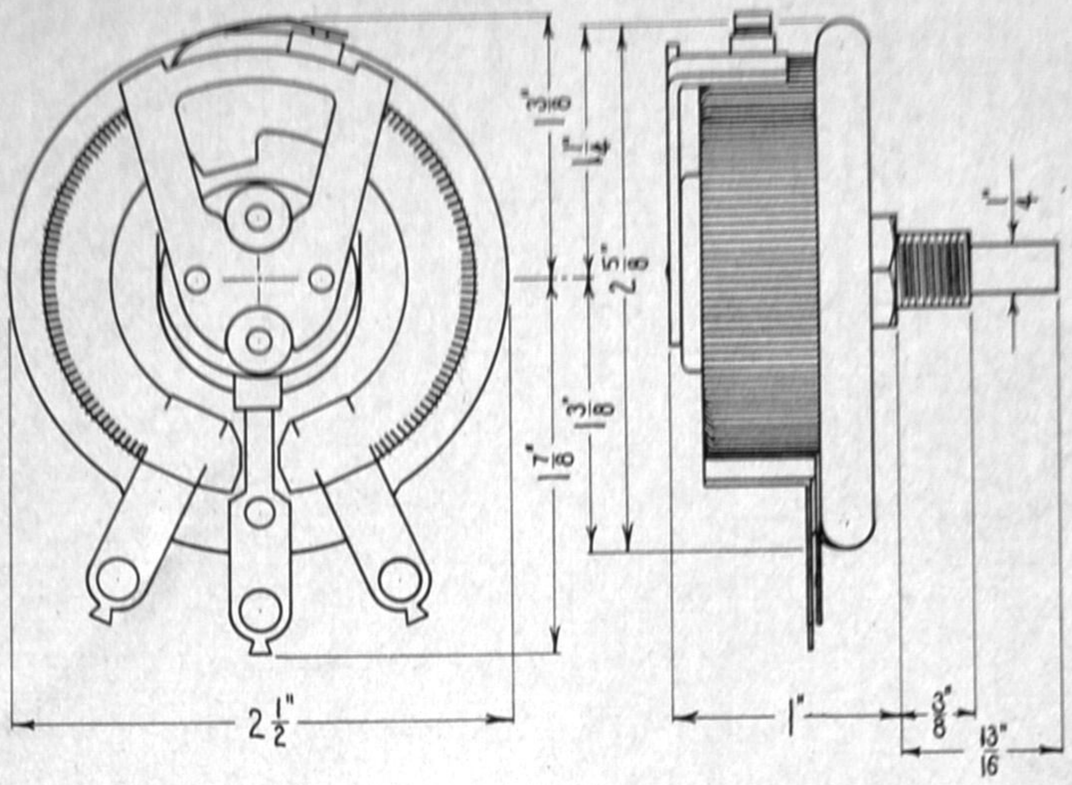

8-D-1 RHEOSTAT–POTENTIOMETER

ELECTRAD, INC., New York City

No. 5X series of rheostat-potentiometers is intended for the most severe service conditions. The base is of glazed porcelain, in which the resistance wire is embedded permanently. The wire is exposed only enough to permit the spring-mounted shoe to make contact. This arrangement absolutely prevents the wire from coming loose as so frequently happens after overloading when the wire is wound on a fibre strip. The maximum resistance ratings are accurate ±10%. No. 5X rheostats are available in the following values:

Ohms Resist.	Max. Amps.	Ohms Resist.	Max. Amps
1	7	25	1.4
1.5	5.8	30	1.3
2	5	40	1.1
2.5	4.5	50	1.
3	4.1	75	.81
4	3.5	100	.70
5	3.1	150	.58
6	2.9	200	.5
8	2.5	300	.41
10	2.2	500	.31
15	1.8	800	.25
20	1.6	1,000	.22

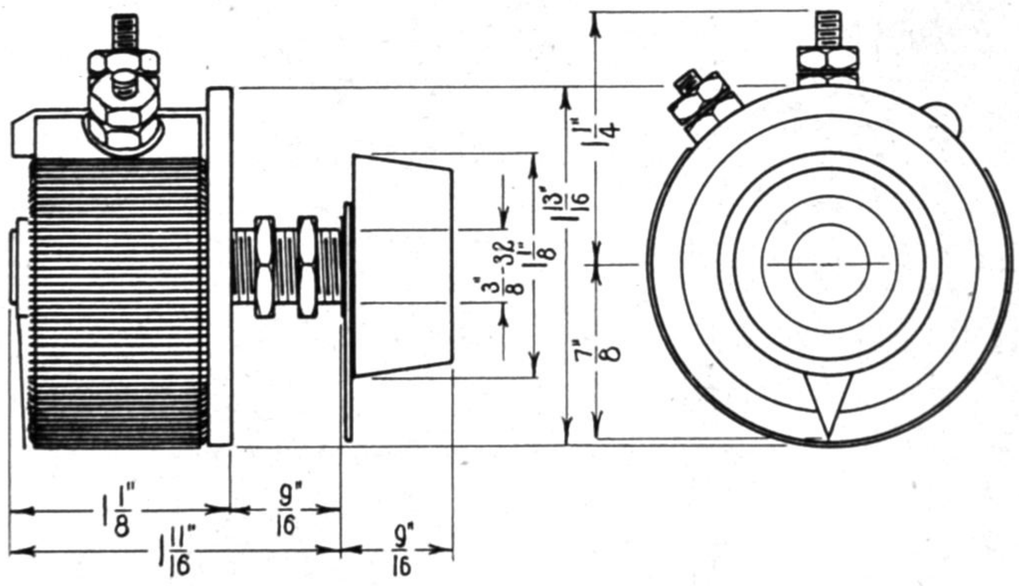

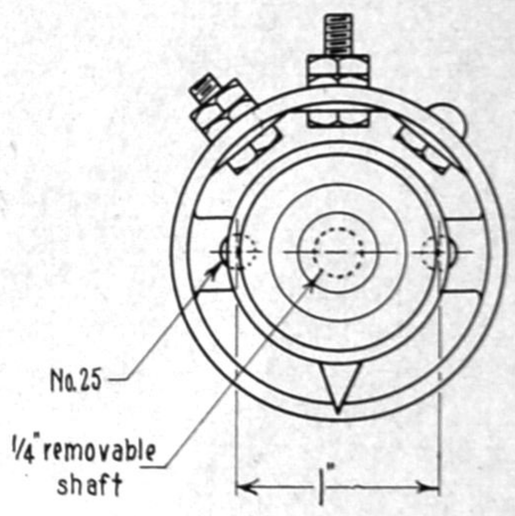

8-D-2 RHEOSTAT–POTENTIOMETER

GENERAL RADIO COMPANY, Cambridge, Mass.

No. 410-A rheostat-potentiometers, rated at 5 watts dissipation, are illustrated at the left in the drawing above. This type is for single-hole mounting to take the 3/8-32 threaded bushing. There is no OFF position. The No. 410-A series comprises the following values:

Ohms Resist.	Max. Amps.	Ohms Resist.	Max. Amps.
6	1	25	.5
12	.7	200	.175

8-D-3 RHEOSTAT–POTENTIOMETER

GENERAL RADIO COMPANY, Cambridge, Mass.

No. 301-A series is identical in design to the 410-A series, except that the Bakelite frame is drilled for two mounting screws, as shown at the right of drawing above. The 10,000-ohm and 20,000-ohm sizes have linen Bakelite protector strip around the resistance elements. The No. 301-A series comprises the following values:

Ohms Resist.	Max. Amps.	Ohms Resist.	Max. Amps.
6	1	200	.175
12	.7	10,000	.017
25	.5	20,000	.012

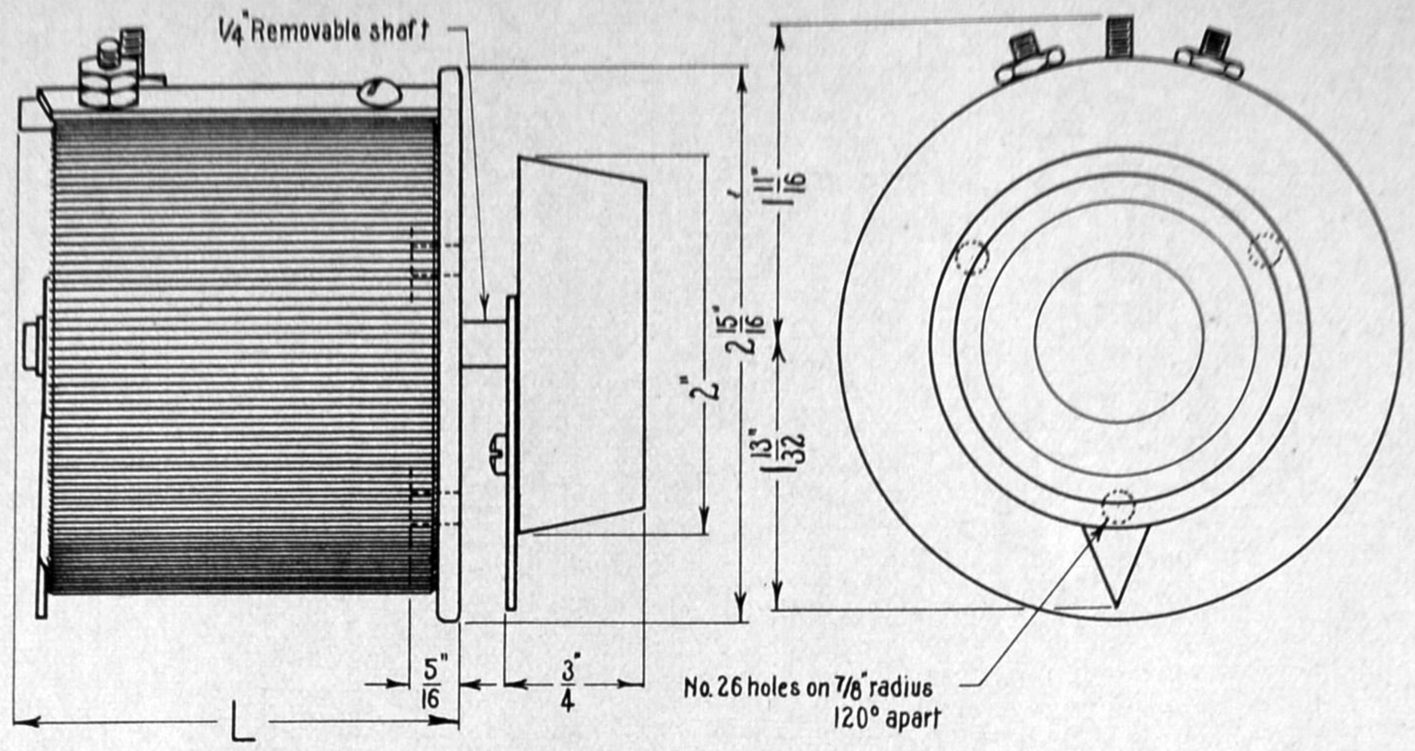

8-D-4 RHEOSTAT-POTENTIOMETER

GENERAL RADIO CO., Cambridge, Mass.

No. 371-A and No. 214-A rheostat-potentiometers are made with the resistance wire wound on a thin linen-Bakelite strip, supported on a molded Bakelite frame. A single-blade contact runs on the wire. The wider resistance element in the 371-A gives a rating of 20 watts, while the 214-A series is rated at 9 watts. Both styles, fitted with ¼-in. removable shafts, can be used for panel or table mounting. Note that there is a 371-T design, the resistance of which is approximately proportional to the square of the angle, increasing with clock-wise rotation in panel-mounted position. Special resistor shapes are made to order.

No. 371-A L = 2⅜″		No. 214-A L = 1 3/16″	
Max. Ohms	Max. Mils	Max. Ohms	Max. Mils
1	4,500	.75	3,500
5	2,000	2.	2,100
1,000	140	7	1,100
2,500	90	20	670
5,000	60	50	425
10,000	45	100	300
18,000	30	200	210
50,000	20	400	160
10,000*	28	1,000	95
* No. 371-T tapered model		2,500	60

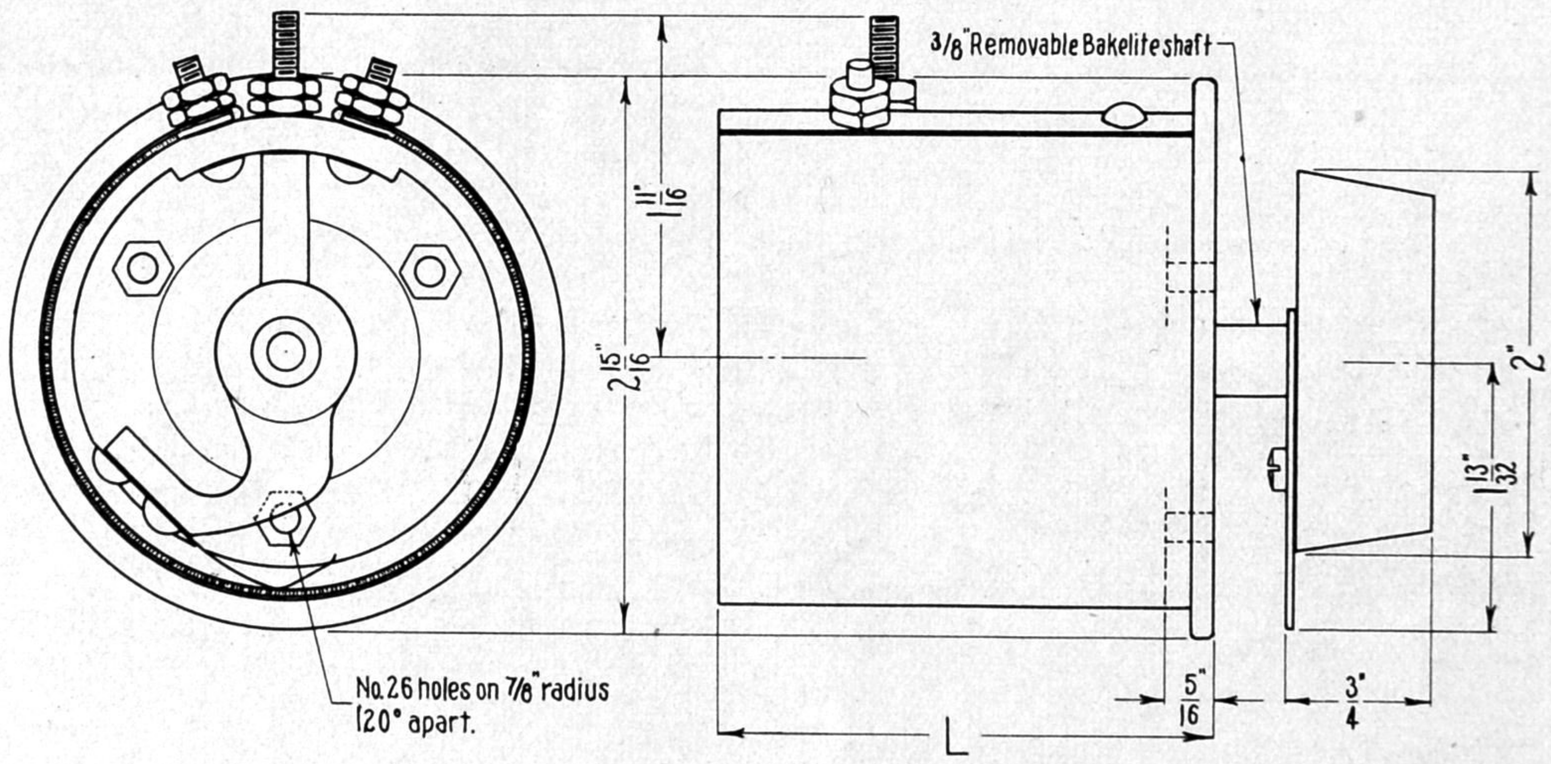

8-D-5 LOW-NOISE RHEOSTAT-POTENTIOMETER

GENERAL RADIO CO., Cambridge, Mass.

Nos. 471-A and 314-A are rheostat-potentiometers specially designed for high-impedance vacuum tube circuits. The special feature of this design is the 4-finger wiping contact which runs on the inside of the resistance element, giving an essentially constant average contact resistance. High values of resistance are obtained by using very fine wire and protecting it from damage and derangement by an outer band of thin linen Bakelite. These units can be used on metal panels, for the removable shaft is of ⅜-in. Bakelite. The molded Bakelite frame is designed for panel or base mounting. No. 471-A is rated at 12 watts, and No. 314-A at 6 watts.

No. 471-A L = 2⅝″		No. 314-A L = 1⅜″	
Max. Ohms	Max. Mils	Max. Ohms	Max. Mils
100	330	200	165
1,000	104	600	95
10,000	33	2,000	52
50,000	14.7	6,000	30
100,000	10.4	20,000	16
200,000	7.3		

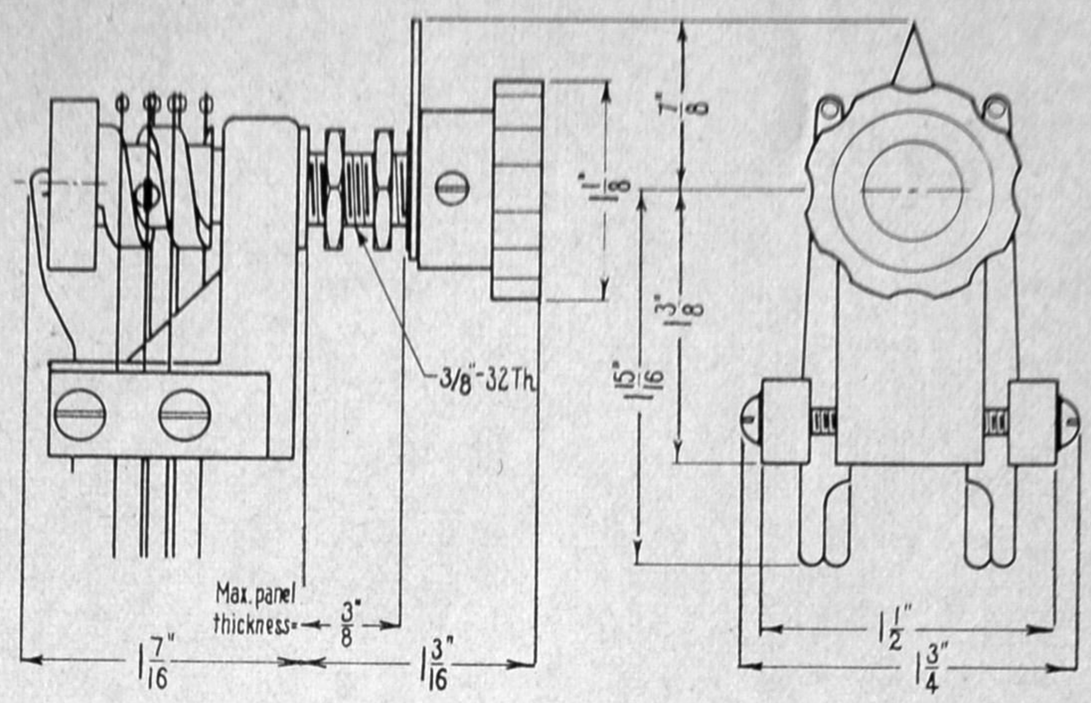

9-A-1 ANTI-CAPACITY SWITCH

GENERAL RADIO CO., Cambridge, Mass.

No. 339-B is a double-pole, double-throw anti-capacity switch, with a center "off" position in which all contacts are open. The movable contacts are actuated positively by a Bakelite worm engaged by extensions on the contact springs. Each position is marked by a detent device at the rear of the shaft. The switch is mounted in a single 3/8-in. hole in panels up to 3/8 in. in thickness. The switch is designed for 250 volts, and the contacts will break 2 amperes safely.

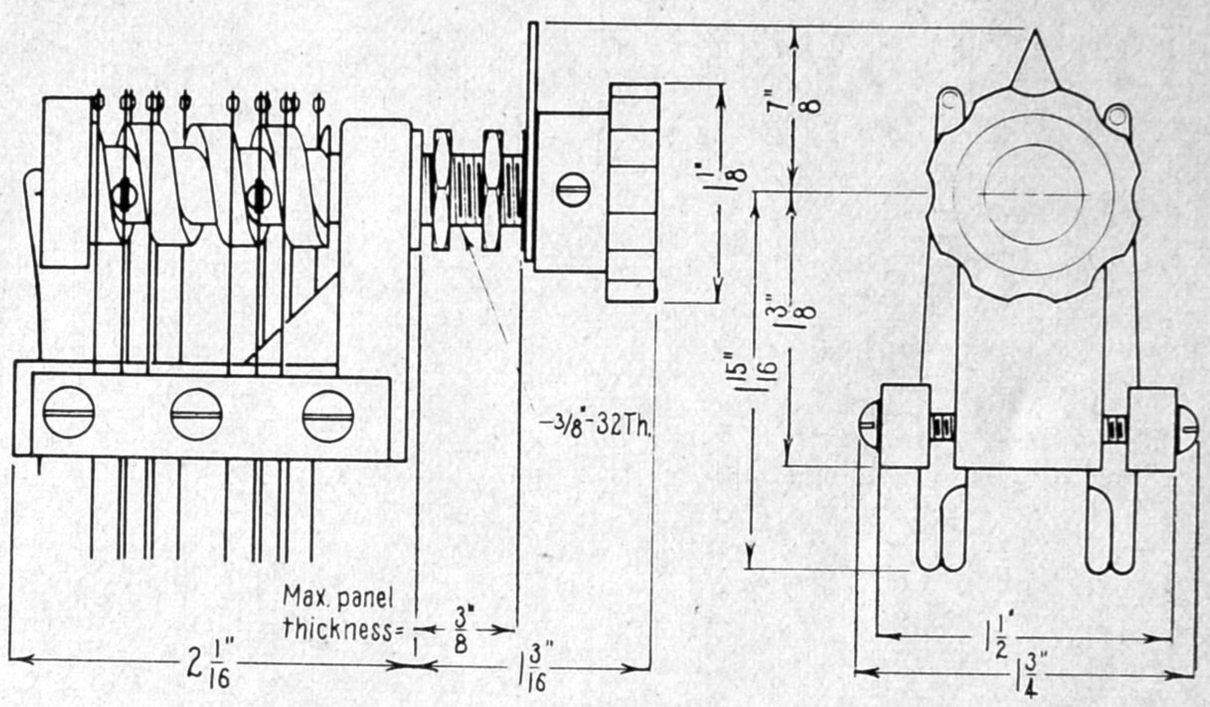

9-A-2 ANTI-CAPACITY SWITCH

GENERAL RADIO CO., Cambridge, Mass.

No. 339-B is a four-pole, double-throw anti-capacity switch, with a center "off" position in which all contacts are open. The movable contacts are actuated positively by a Bakelite worm engaged by extensions on the contact springs. Each position is marked by a detent device at the rear of the shaft. The switch is mounted in a single 3/8-in. hole in panels up to 3/8 in. in thickness. The switch is designed for 250 volts, and the contacts will break 2 amperes safely.

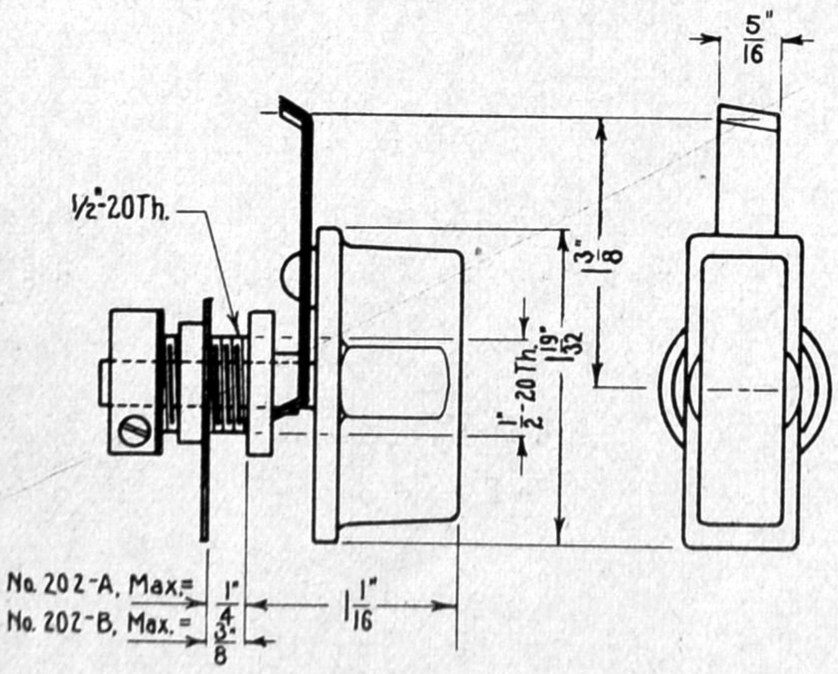

9-A-3 PANEL SWITCH

GENERAL RADIO CO., Cambridge, Mass.

No. 202 is a quadruple-leaf phosphor-bronze switch with blades arranged to make wiping contact on the switch-points and on the panel bushing. Switch-points shown at 10-D-2 and 10-D-3 of this Section, on a 1 3/8-in. radius, should be used with this switch. A 1/2-in. hole is required for the panel bushing. No. 202-A is intended for panels 1/8 to 1/4 in. thick, and No. 202-B for panels 1/4 to 3/8 in. thick.

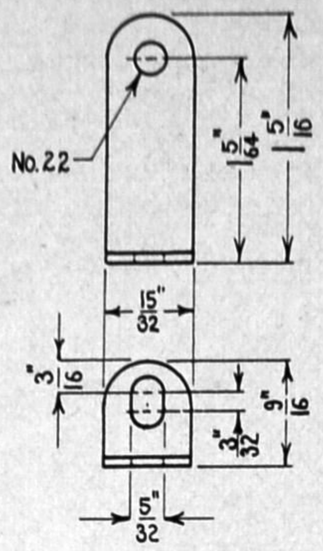

10-A-1 MOUNTING LEGS
NATIONAL COMPANY, Malden, Mass.

The mounting legs illustrated above are suited to a variety of uses, altho they are intended particularly for mounting NATIONAL variable condensers on horizontal chassis assemblies, or on bread-board layouts for experimental use.

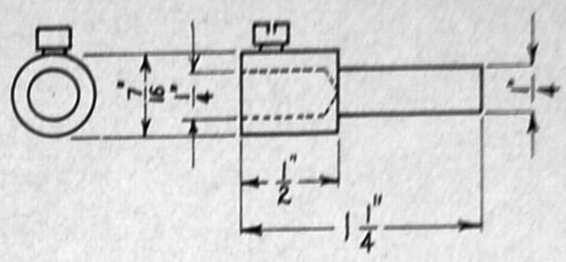

10-B-1 1/4-IN. SHAFT EXTENSION
NATIONAL COMPANY, Malden, Mass.

The shaft extensioe illustrated above is supplied with those models of NATIONAL variable condensers as are fitted with short shafts to accommodate such dials as have bushings extending to the rear. With this shaft extension, such condensers can be fitted with any of the conventional dials.

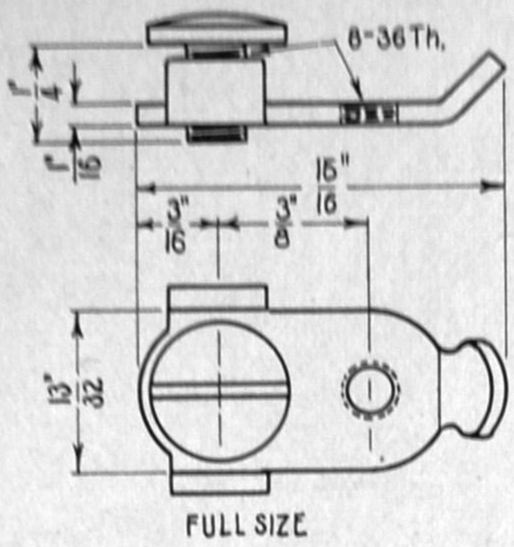

10-C-1 SOLDERING TERMINAL
NATIONAL COMPANY, Malden, Mass.

This soldering terminal is of a type widely used on all kinds of commercial equipment for low-voltage circuits where positive, permanent connections are required. The small end is for soldering the internal lead; the screw at the other end clamps down on the external wire while the side lips hold it from slipping out.

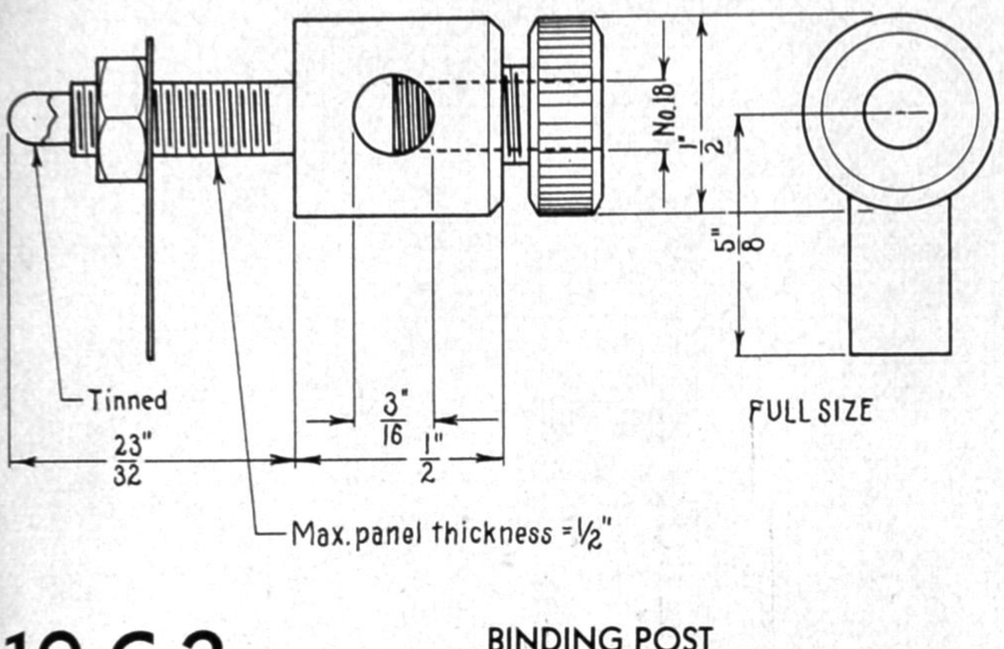

10-C-2 BINDING POST
GENERAL RADIO CO., Cambridge, Mass.

Nos. 138-V and 138-VD are nickel-plated binding posts, the former with dimension L of 11/16 in., and the latter 1 in. A hole in the thumb-nut takes a small GENERAL RADIO plug terminal. A stud comes flush with the bottom of the side hole, so that when a wire is inserted and the thumb-nut turned down, it is pressed down on a flat surface.

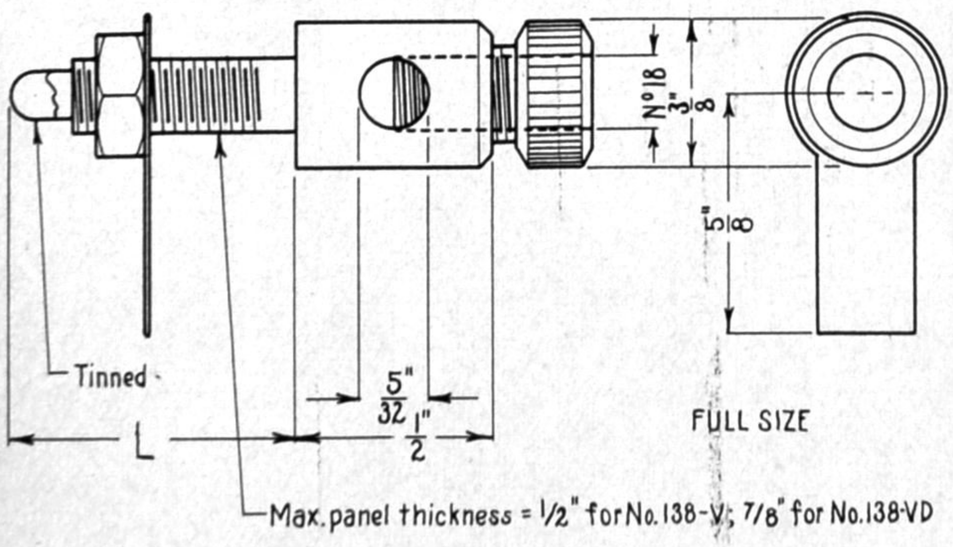

10-C-3 BINDING POST
GENERAL RADIO CO., Cambridge, Mass.

No. 138-X is similar to the binding posts described above, but is of larger proportions. The thumb-nut takes a small GENERAL RADIO plug terminal.

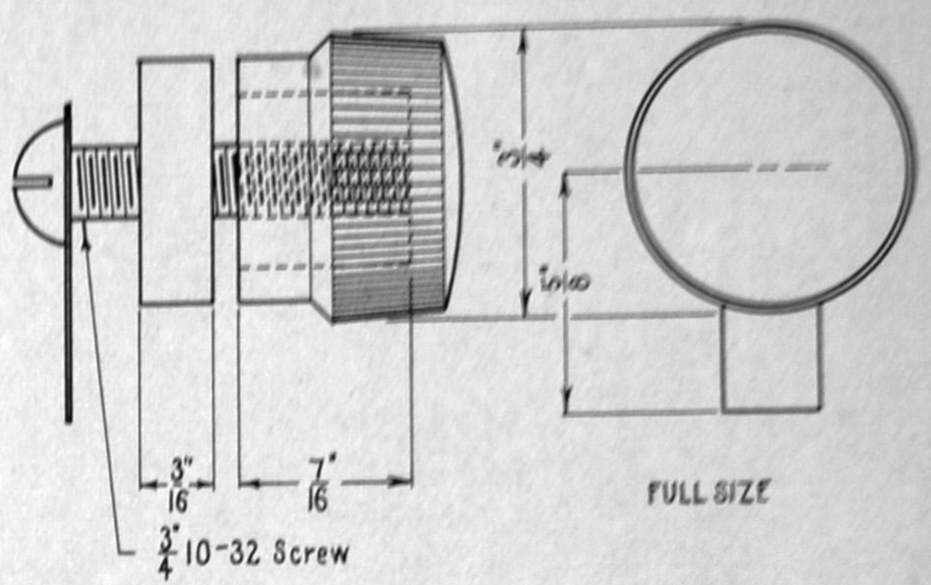

10-C-4 BINDING POST
GENERAL RADIO CO., Cambridge, Mass.

No. 138-A is a plain binding post fitted with a Bakelite thumb-nut. This type is preferable for circuits which carry rather high voltages.

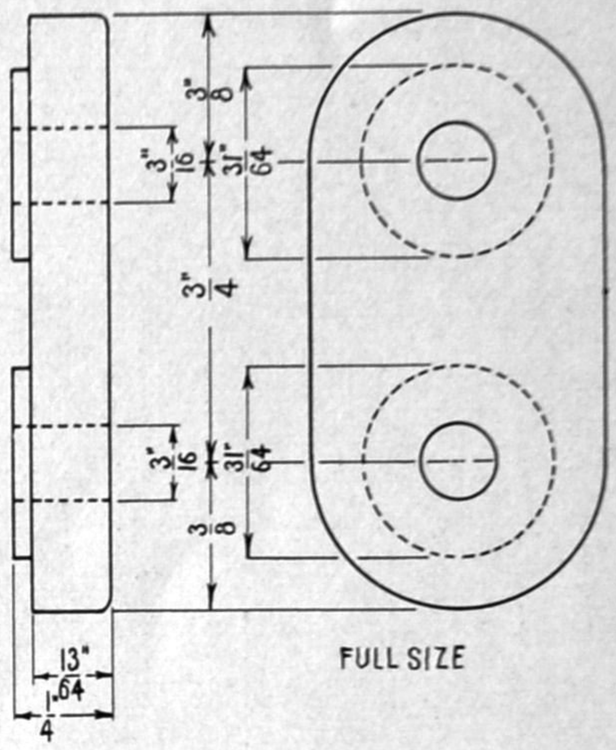

10-C-5 TERMINAL INSULATORS
GENERAL RADIO CO., Cambridge, Mass.

No. 274 binding post insulators are used in pairs to mount terminals on metal panels. Note that they have the 3/4-in. center-to-center spacing, so that the terminals will accommodate various GENERAL RADIO devices. No. 274-Y insulators are of black Backelite, while No. 274-Z are yellow.

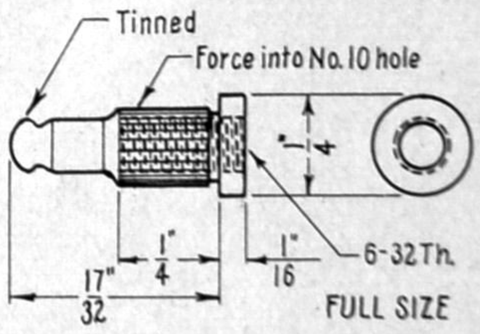

10-C-6 TERMINAL INSERT
GENERAL RADIO CO., Cambridge, Mass.

No. 738-A is a terminal stud to be forced into a No. 10 hole. It is useful as a terminal, or as a support for wiring.

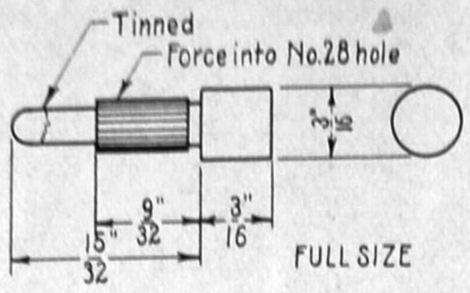

10-D-1 3 16-IN. SWITCH POINT
GENERAL RADIO CO., Cambridge, Mass.

No. 138-D is a nickel-plated, bronze switch-point, 3/16 in. in diameter, intended to be forced into a No. 28 hole. The tip is tinned for soldering.

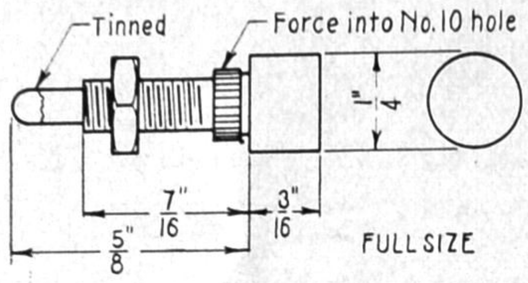

10-D-2 1 4-IN. SWITCH POINT
GENERAL RADIO CO., Cambridge, Mass.

No. 138-B is a nickel-plated, bronze switch-point, 1/4 in. in diameter, held by a knurled shoulder and a 6/32 nut. The tip is tinned for soldering.

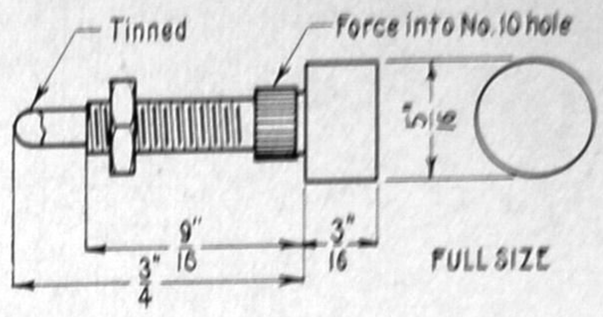

10-D-3 5 16-IN. SWITCH POINT
GENERAL RADIO CO., Cambridge, Mass.

No. 138-C is a nickel-plated, bronze switch-point, 5/16 in. in diameter, held by a knurled shoulder and a 6/32 nut. The tip is tinned for soldering.

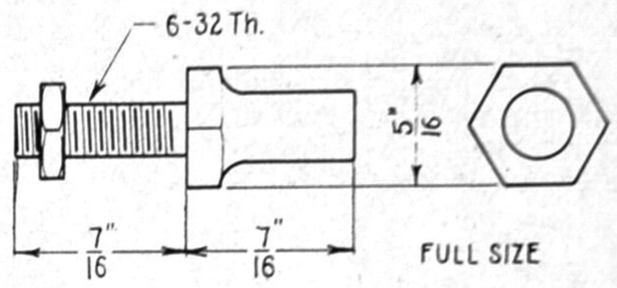

10-D-4 SWITCH STOP
GENERAL RADIO CO., Cambridge, Mass.

No. 138-Q is a nickel-plated, brass switch stop, turned from hexagonal stock. It has a shank threaded for a 6/32 nut.

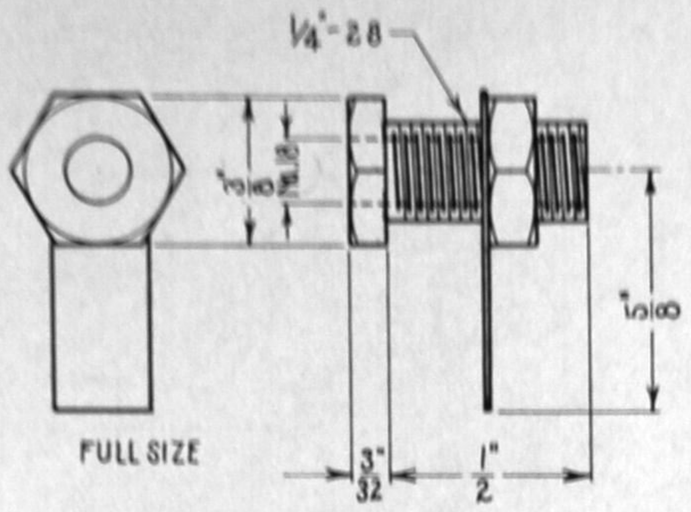

11-A-1 JACK TERMINAL
GENERAL RADIO CO., Cambridge, Mass.

No. 274-J is the standard jack for the various plug terminals shown in the succeeding paragraphs. When two jacks are used for circuit connections, it is advisable to follow the GENERAL RADIO practice of mounting them on ¾-in. centers. Current rating, 8 amperes.

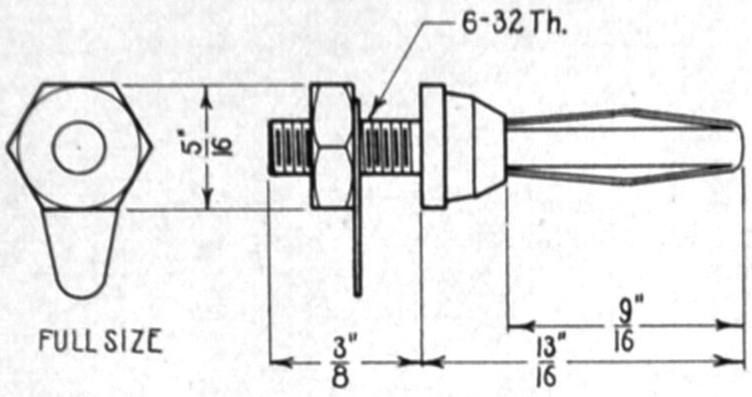

11-A-2 PLUG TERMINAL
GENERAL RADIO CO., Cambridge, Mass.

No. 274-P is the basic plug terminal. Low-resistance contact is made to the jack by the four-leaf spring which is supported on an inside rod. These plugs lend themselves to an endless number of experimental and interchangeable arrangements.

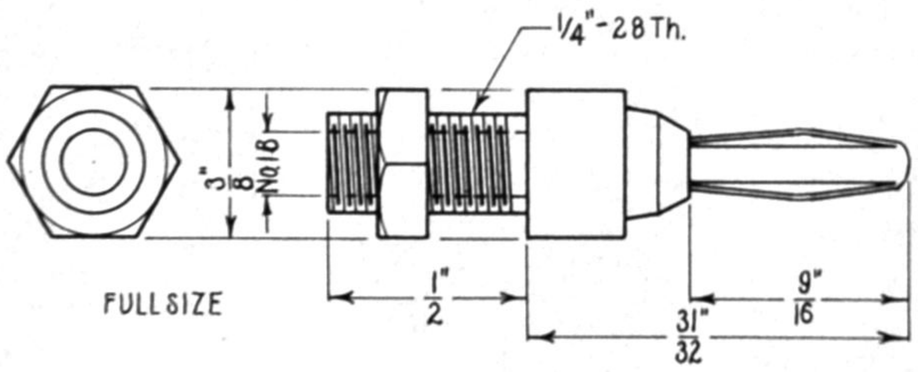

11-A-3 PLUG TERMINAL
GENERAL RADIO CO., Cambridge, Mass.

No. 274-U is a plug terminal with a counterbored shank to take another plug. This is used for connecting units, such as resistors or condensers which can be stacked up in parallel, or for a plug-in unit which may be shunted by another instrument or device.

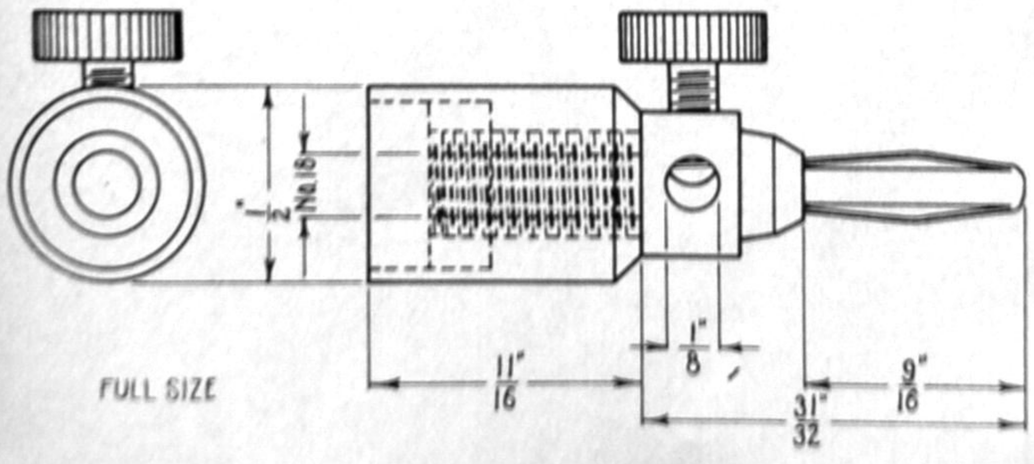

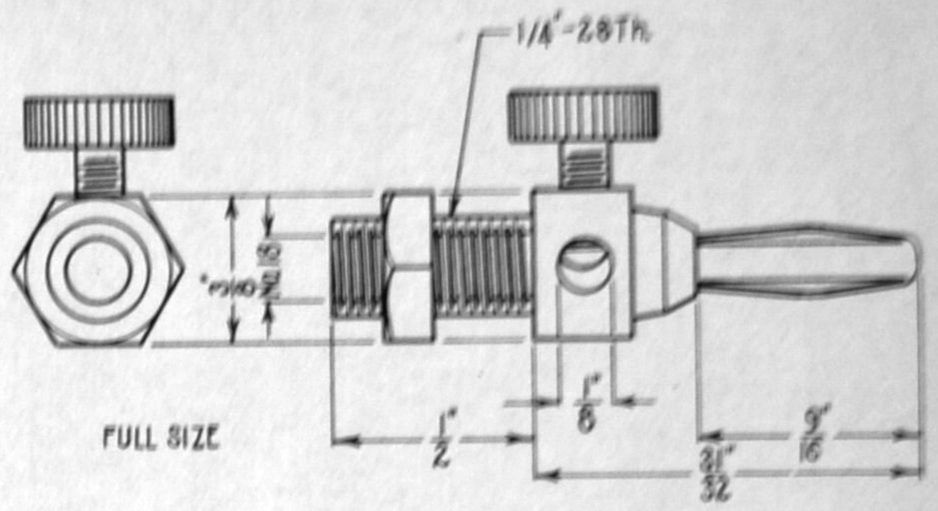

11-A-4 PLUG TERMINAL
GENERAL RADIO CO., Cambridge, Mass.

No. 274-E is essentially the same as the plug shown at 11-A-6, without the insulating sleeve. A plug can be inserted at the top, and a wire attached thru the side. Note that all holes for the plugs are No. 18 drill size.

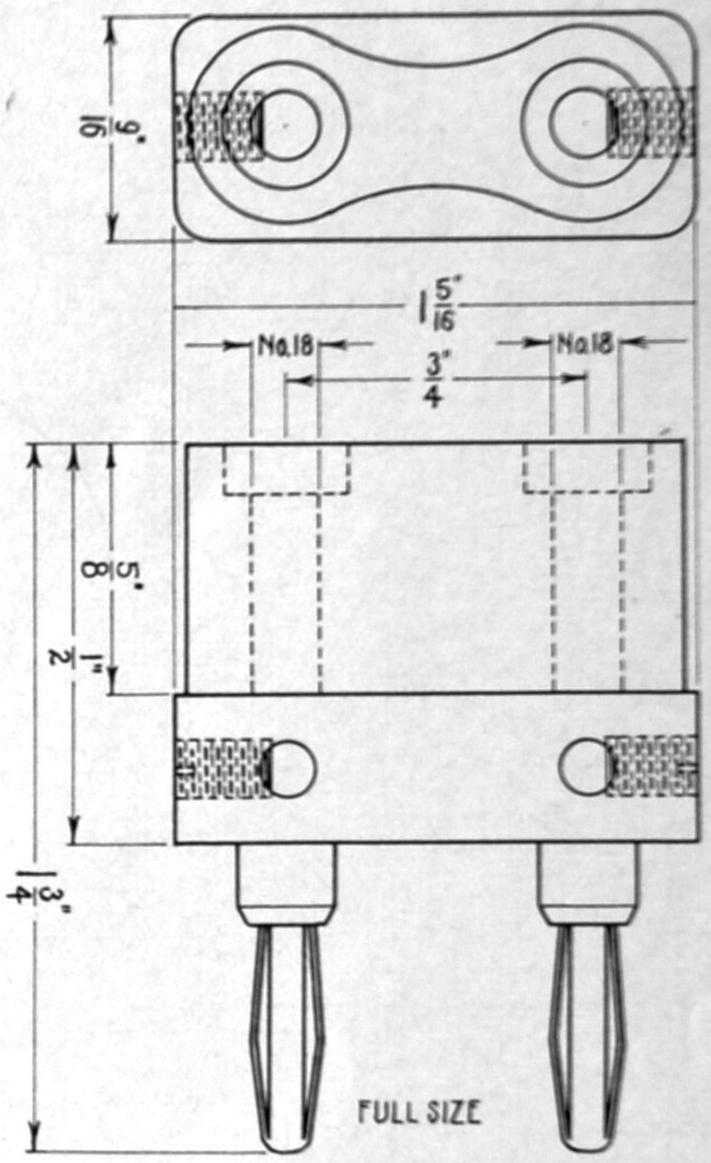

11-A-5 DOUBLE PLUG
GENERAL RADIO CO., Cambridge, Mass.

Nos. 274-M and 274-ML are double plugs with side holes for inserting cord tips. Other plugs can be inserted at the top. No. 274-M is of black Bakelite, while No. 274-ML is of yellow, low-loss Bakelite material.

11-A-6 INSULATED PLUG
GENERAL RADIO CO., Cambridge, Mass.

No. 274-D is an insulated, combination plug. The upper shank has a Bakelite sleeve. A wire lead can be attached to the plug and clamped by the thumb-screw. Also, a plug can be inserted at the top, for the shank is counterbored for that purpose.

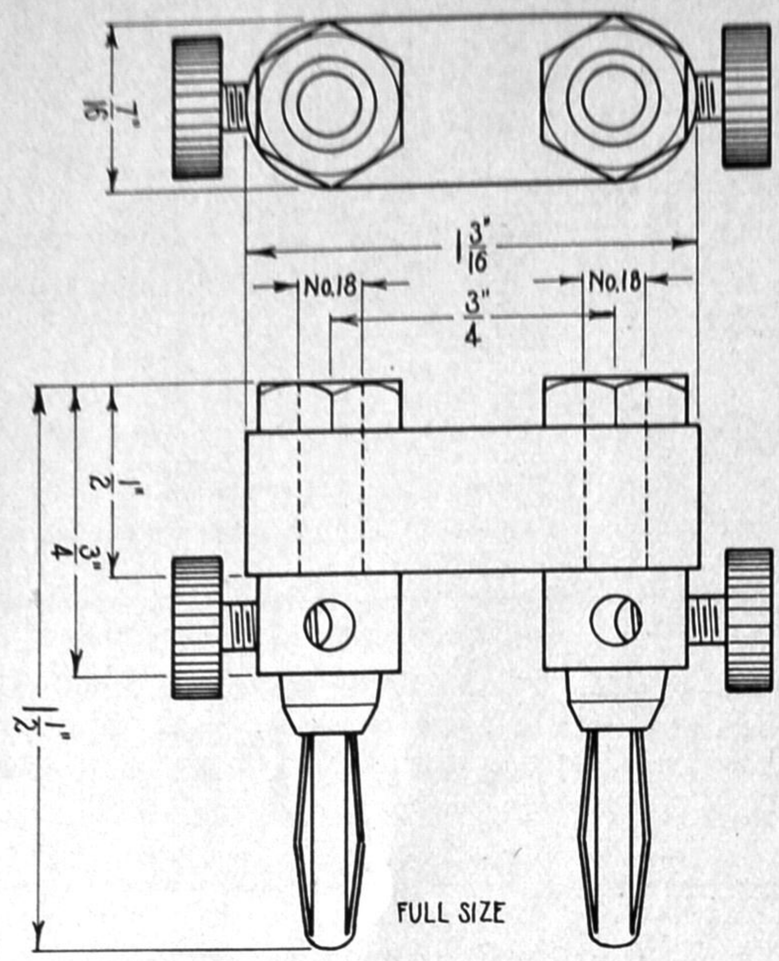

11-A-7 DOUBLE PLUG

GENERAL RADIO CO., Cambridge, Mass.

No. 274-G is another type of double plug, with a black Bakelite spacer. Leads can be connected at the side, and another plug inserted at the top, if desired.

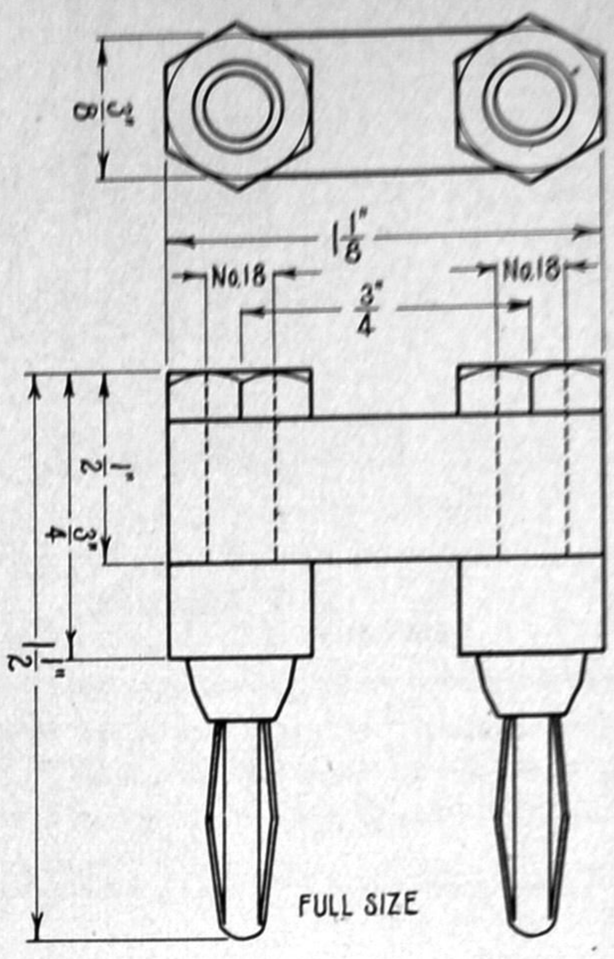

11-A-8 SHORT-CIRCUITING PLUG

GENERAL RADIO CO., Cambridge, Mass.

No. 274-SB is a short-circuiting plug, comprising two plugs carried on a nickel-plated brass bar. Plugs can be inserted at the top if additional connections are needed.

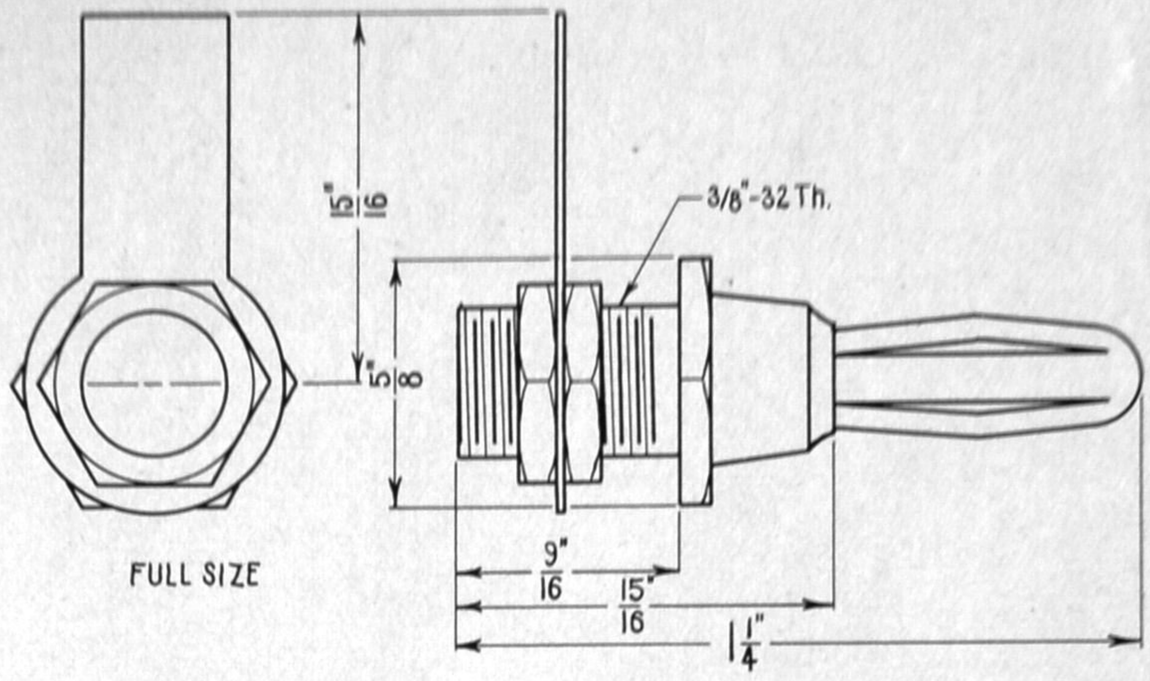

11-A-11 JUMBO TERMINAL PLUG

GENERAL RADIO CO., Cambridge, Mass.

No. 674-P is a jumbo plug for use on various types of heavy instruments, or those carrying currents up to 25 amperes. The shank requires a 3/8-in. hole, and can take panels up to 3/8 in. in thickness. The phosphor-bronze contact springs on the jumbo plug are in six sections, to provide extra contact area. Note that the top is not counterbored on the jumbo type.

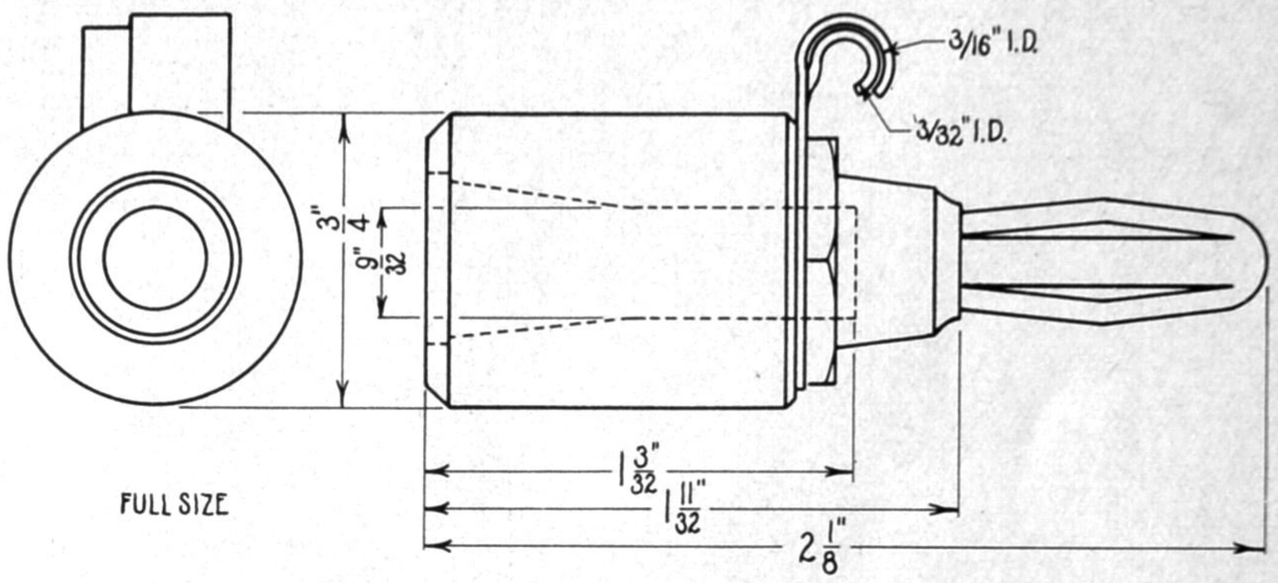

11-A-12 INSULATED JUMBO PLUG

GENERAL RADIO CO., Cambridge, Mass.

No. 674-D is an insulated jumbo plug, fitted with a heavy Bakelite sleeve. Below the sleeve there is a split soldering lug, one half of which is rolled over to an inside diameter of 3/16 in., while the other half is rolled over to an inside diameter of 3/32 in. This plug is counterbored at the top to permit the insertion of another jumbo plug.

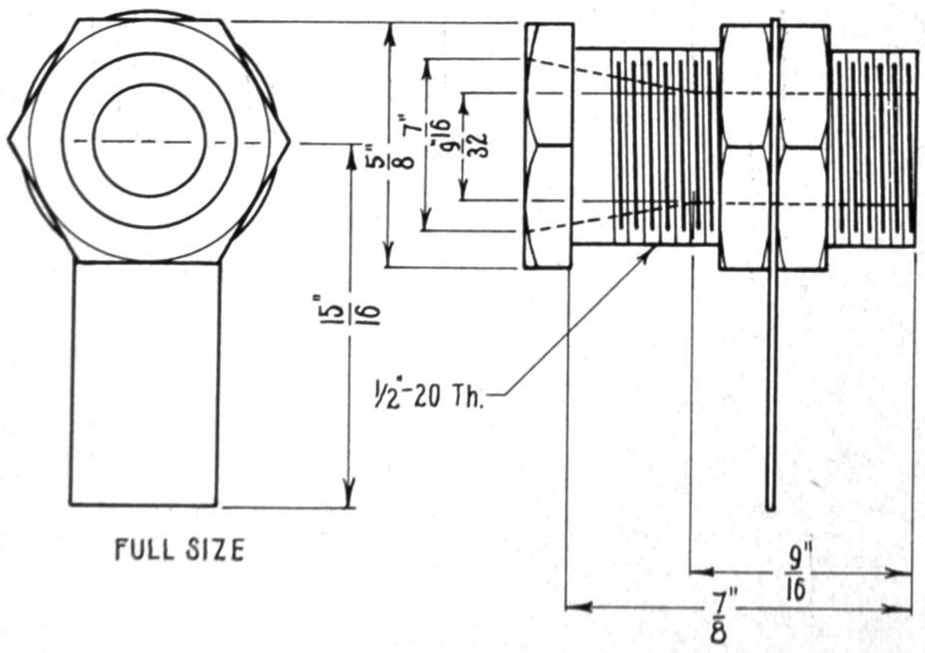

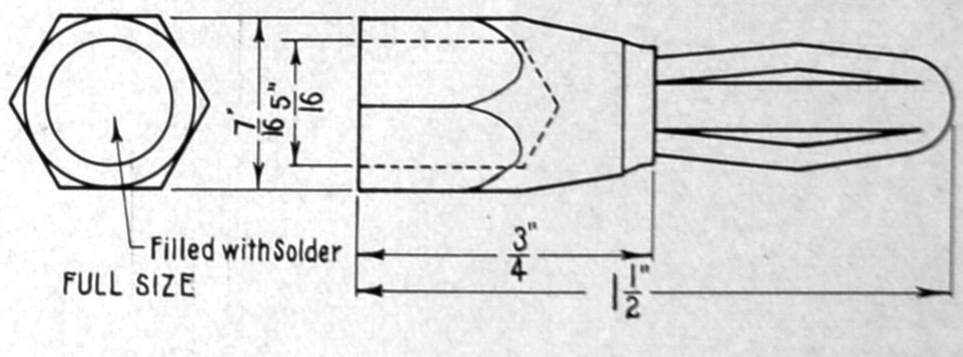

11-A-10 JUMBO TERMINAL PLUG

GENERAL RADIO CO., Cambridge, Mass.

No. 674-C is a jumbo terminal plug counterbored for 1/4-in. wire or tubing, and is furnished with the hole already filled with solder for sweating in the conductor.

11-A-9 JUMBO TERMINAL JACK

GENERAL RADIO CO., Cambridge, Mass.

No. 674–J is a jumbo terminal jack, used when heavy currents, up to 25 amperes, are to be handled, or when heavy parts are to be supported. The shank requires a 1/2-in. hole.

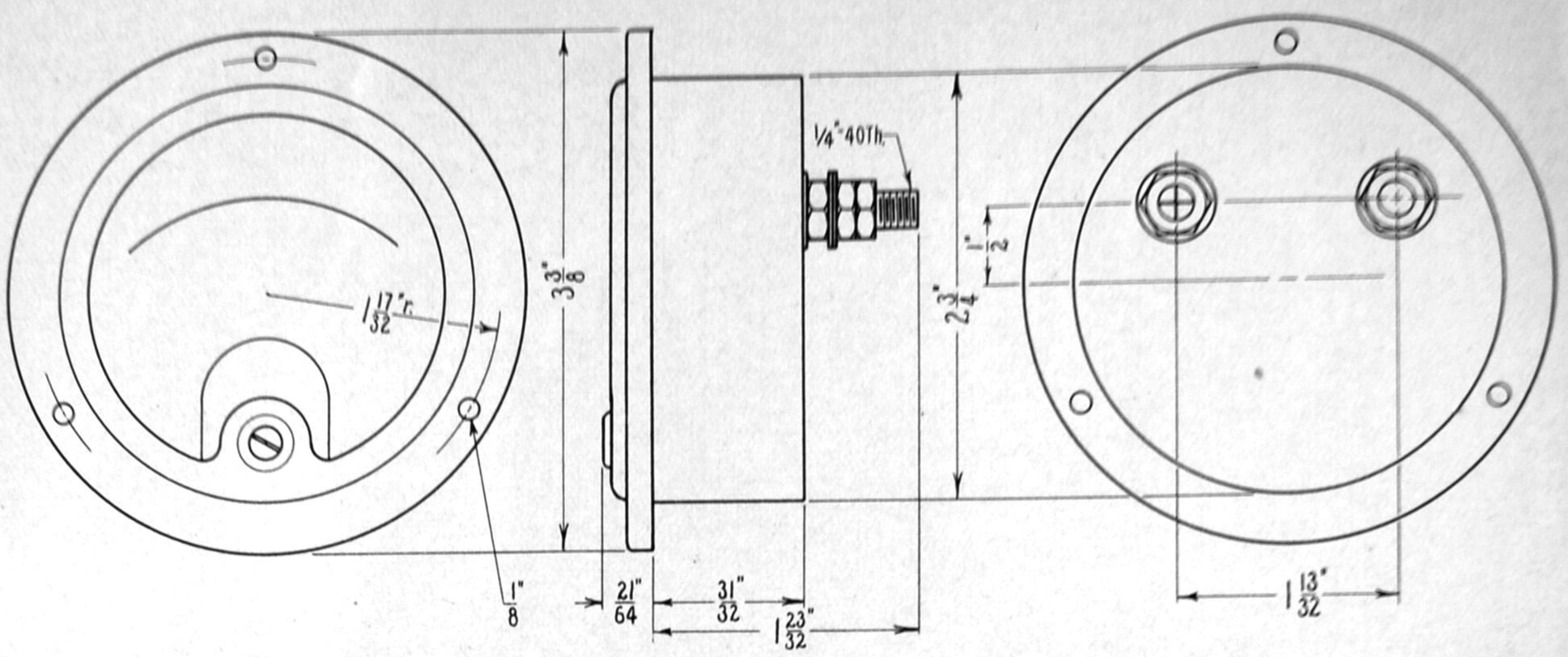

12-A-1 D.C., RECTIFIER, AND DB. METERS, No. 301
WESTON ELECTRICAL INST. CO., Newark, N. J.

No. 301 instruments as listed here are furnished in molded Bakelite cases, of the dimensions shown above. The D.C. models, of the permanent magnet, moving coil design, are accurate within 2%. The rectifier models are equipped with full-wave copper oxide rectifiers and D.C. movements. They are accurate within 5%. Additional information on the db. meter can be obtained from the manufacturers. Flush and surface metal cases and surface Bakelite cases are available also.

D.C. VOLTMETERS

Ranges above 500 volts, external resistor

Volts	O. per V.	Volts	O. per V.
3	62	150	200
5	62	200	250
8	62	300	666
10	62	500	666
15	62	1,000	62
20	62	1,500	62
30	62	2,000	62
50	200	3,000	100
100	200	Accuracy ± 2%	

D.C. VOLTMETERS, No. 301

Volts	O. per V.	Volts	O. per V.
50	1,000	200–8*	1,000
100	1,000	250–50*	1,000
200	1,000	500–100*	1,000
300	1,000	750–250–10*	1,000
500	1,000	750–250–100*	1,000
1,000	1,000	50–10–5**	1,000

* External resistor for 1st range

** External resistor for 1st and 2nd range

D.C. AMMETERS No. 301

External shunt above 50 amps.

Amperes	Amperes	Amperes
1	10	2–0–2
1.5	15	5–0–5
2	20	10–0–10
3	30	20–0–20
5	50	

D.C. MILLIAMMETERS, No. 301

Milliamps.	Milliamps.	Milliamps.
1	15	200
1 5	20	300
2	30	500
3	50	150–15
5	100	150–30
10	150	

D.C. MICROAMMETERS, No. 301

Must be used in horizontal or 45° position

Microamps.	Microamps.
200	500

DECIBEL METER, No. 301

The Model 301 DB Meter indicates the relative strength of a given signal to a standard reference level, which common usage has fixed at six milliwatts. The corresponding voltage for this zero level depends on whether the instrument is for operation on a line having an impedance of either 500 or 600 ohms, not both.

Classified according to pointer action, three types of DB indicators are available: High Speed for the indication of modulation peaks, Low Speed for measuring integrated average modulation over approximately a one second period and the General Purpose Type, which integrates somewhat and shows heavy peaks.

The instrument itself is of the self-contained two stud, rectifier type having a scale reading −10/0/+6 DB. Its range can be increased by adding series resistances. A switch can be arranged to cut in the successive resistors with a dial marked in the number of DB that must be added to the scale indication due to the total series resistance that has been added. It can be furnished in a flush or surface, metal or bakelite case.

OHM METERS, No. 301

Ohms	Battery Volts	Rheo. Ohms
1,000	1.5	100
10,000	4.5	250
100,000	4.5	400
500,000	15.	400
200,000	90.	400

RECTIFIER VOLTMETERS, No. 301

Volts	O. per V.	Volts	O. per V.
1	2,000*	50	1,000
1.5	2,000*	50	2,000*
3	1,000	100	1,000
3	2,000*	100	2,000*
5	1,000	150	1,000
5	2,000*	150	2,000*
15	1,000	300	1,000
15	2,000*		

* Must be used in horizontal or 45° position

RECTIFIER MILLIAMMETERS, No. 301

Milliamps.	Milliamps.
.5*	2
1	5

* Must be used in horizontal or 45° position

RECTIFIER MICROAMMETER, No. 301

Must be used in horizontal or 45° position

Microamps.
500

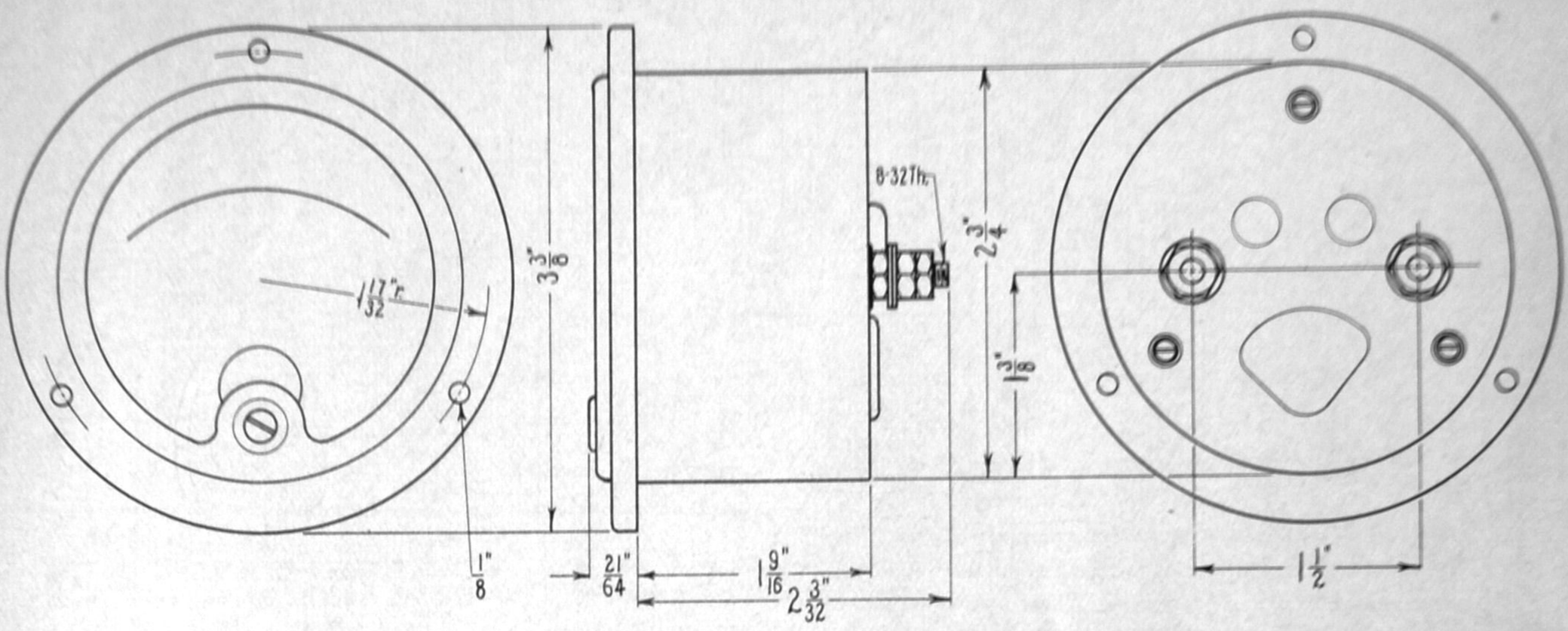

12-A-2 A.C. AND CAPACITY METERS

WESTON ELECTRICAL INST. CO., Newark, N. J.

No. 476 instruments are the A.C. companion-type to the 301 series. They have a moving vane action, and are accurate within 2%. The capacity meter, calibrated in microfarads, is accurate to 3% when used on the specified voltage. Special voltage and frequency ratings are available. In addition to the flush Bakelite case shown above, surface Bakelite and flush and surface metal cases are available also.

A.C. VOLTMETERS, No. 476

* Supplied with external multiplier
** External resistors for 750-16 V. ranges
*** External resistors for first four ranges

Volts	Volts	Volts
1.5	10	100
2	15	150
3	20	250
5	30	300
8	50	500

Volts	Volts
750 *	300–8–4
1,000 *	750–150–16–8–4 **
150–8–4	1,000–200–16–8–4 ***
150–5–3	

A.C. AMMETERS, No. 475

Amperes	Amperes	Amperes
1	2	5
1.5	3	10

Amperes	Amperes
15	30
20	50

A.C. MILLIAMMETERS, No. 476

Milliamps.	Milliamps.	Milliamps.
15	50	250
25	100	500

CONDENSER METER, No. 476

0–1.5–15 mfd., operated on 110 V., 60 cycles

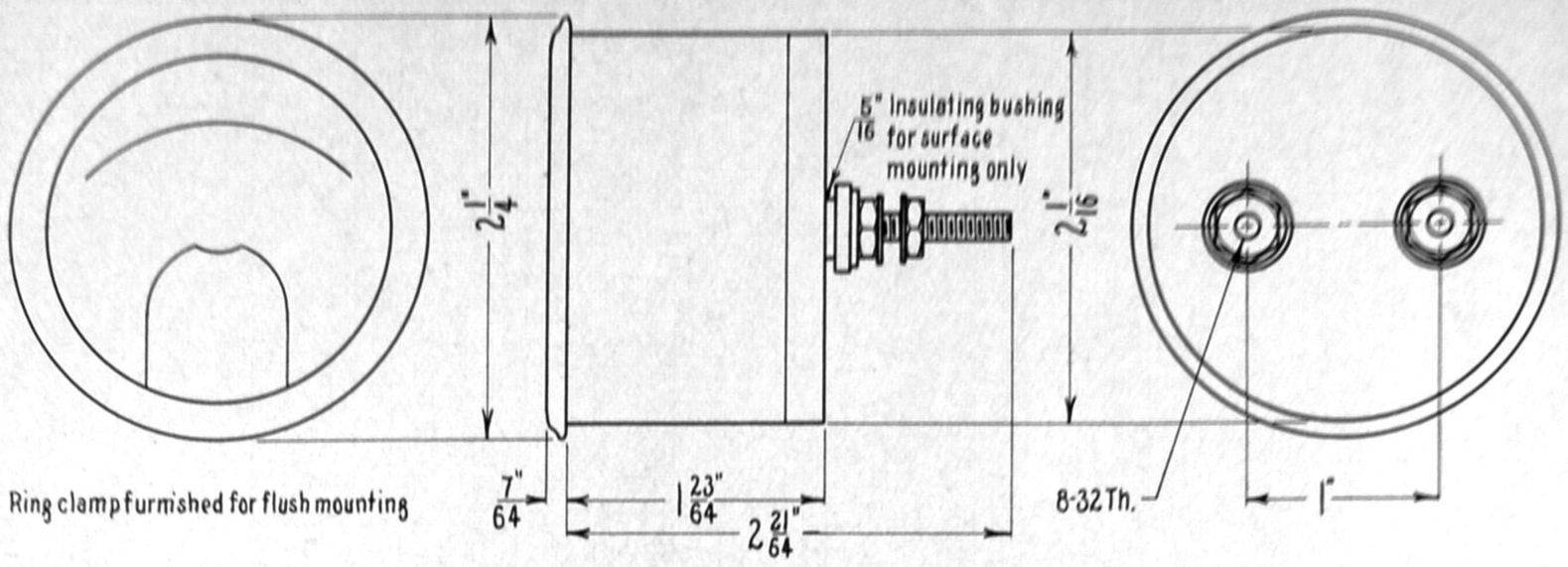

12-A-3 NARROW-FLANGE A.C. AND D.C. METERS
GENERAL ELECTRIC CO., Schenectady, N. Y.

No. DW series meters are made with molded composition cases. The narrow-flange type, above, can be used for flush or surface mounting. A ring clamp is provided for flush mounting. These instruments have permanent magnets and moving coils. The scale length is 1½ ins. They are accurate within 2%, except the rectifier types, which are rated at 5% accuracy.

12-A-4 WIDE-FLANGE A.C. AND D.C. METERS
GENERAL ELECTRIC CO., Schenectady, N. Y.

The wide-flange models in the DW series, shown below, differ from the narrow-flange models only in the case dimensions.

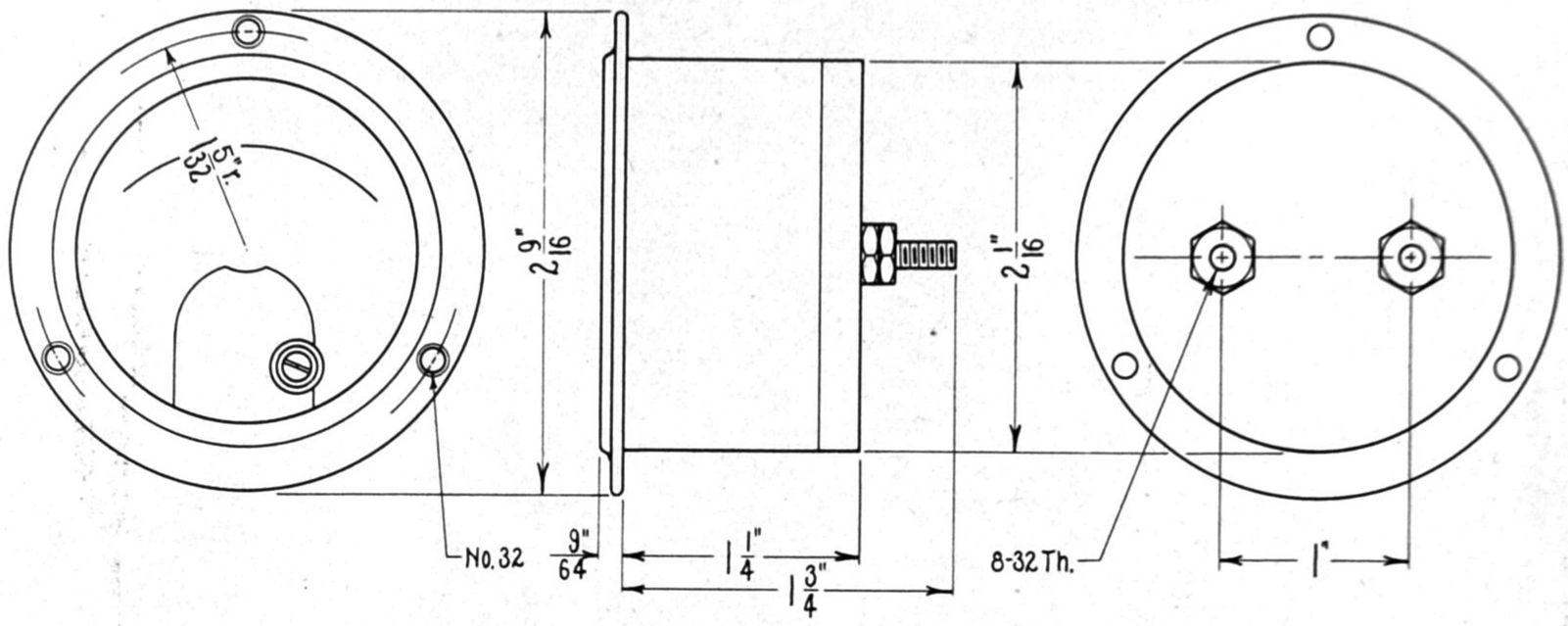

D.C. VOLTMETERS, DW Series

Volts	O. per V.	Volts	O. per V.
1	100	50	1,000
1	1,000	75	100
1.5	1,000	75	1,000
2	100	100	100
2	1,000	100	1,000
3	100	150	100
3	1,000	150	1,000
5	100	200	100*
5	1,000	200	1,000
8	100	250	100*
8	1,000	250	1,000
10	100	300	1,000
10	1,000	500	1,000*
15	100	750	1,000*
15	1,000	1,000	1,000*
20	100	1,500	100*
25	100	2,000	100*
25	1,000	2,500	100*
30	100	3,000	100*
50	100	5,000	100*

* Supplied with external resistor

D.C. AMMETERS, DW Series

Amps.	Ohms Resist.	Amps.	Ohms Resist.
1	.050	15	.0033
1.5	.033	20	.0025
3	.0167	30	.00167
5	.01	50	.001*
10	.005		

* Supplied with external shunt

D.C. MILLIAMMETERS DW Series

Milliamps.	Ohms	Milliamps.	Ohms
1	115	25	2.0
1.5	95	50	1.0
2	75	100	.5
3	25	150	.33
5	10	200	.25
10	6	300	.167
15	3.3	500	.10

D.C. MICROAMMETERS, DW Series

Microamps.	Ohms React.
500	115
750	115

R.F. THERMO-COUPLE AMMETERS, DW Series

Amps.	Ohms Resist.	Amps.	Ohms Resist.
1	.29	6	.028
1.5	.17	8	.024
2	.11	10	.017
3	.065	15	.013
5	.045	20	.012

R.F. THERMO-COUPLE MILLIAMMETERS, DW

Milliamps.	Ohms	Milliamps.	Ohms
100	6.8	500	.62
150	6.1	750	.50
250	2.0		

RECTIFIER MILLIAMMETERS, DW Series

Milliamps.	Ohms	Milliamps.	Ohms
1	650	5	300
2	550	10	200

RECTIFIER MICROAMMETERS, DW Series

Microamps.	Ohms Resist.
200	
500	1,200

RECTIFIER VOLTMETERS, DW Series

Volts	Ohms Resist.	Volts	Ohms Resist.
1	1,800	15	27,000
1.5	2,700	50	50,000
2	3,600	100	100,000
3	5,400	150	150,000
5	9,000	300	300,000
10	18,000		

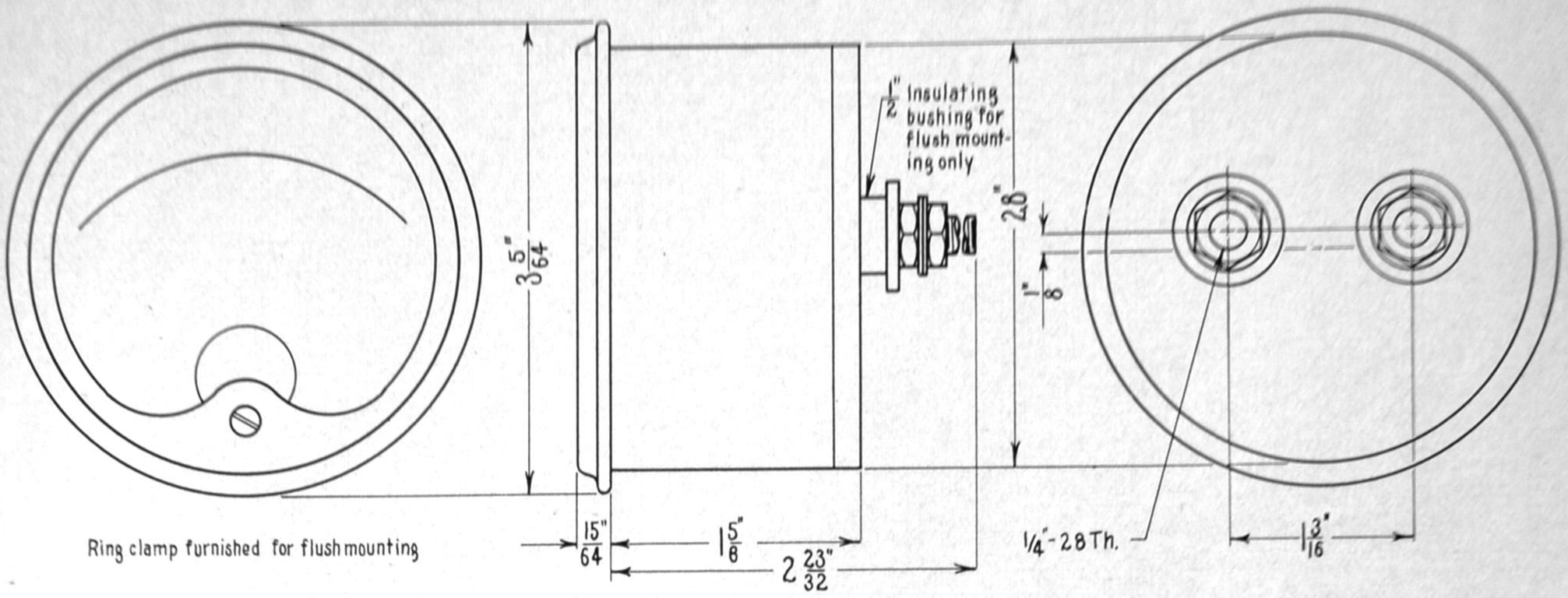

12-A-5 NARROW-FLANGE A.C. METERS
GENERAL ELECTRIC CO., Schenectady, N. Y.

No. AO series are made with molded composition cases. The narrow-flange type, above, can be used for flush or surface mounting. A ring clamp is provided for flush mounting. These instruments have a magnetic vane movement. The scale length is 2.2 ins. They are accurate within 2%. The ammeters will withstand an instantaneous current 10 times the normal rating without affecting the accuracy.

12-A-6 WIDE-FLANGE A.C. METERS
GENERAL ELECTRIC CO., Schenectady, N. Y.

The wide-flange models in the AO series, shown below, differ from the narrow-flange models only in the case dimensions.

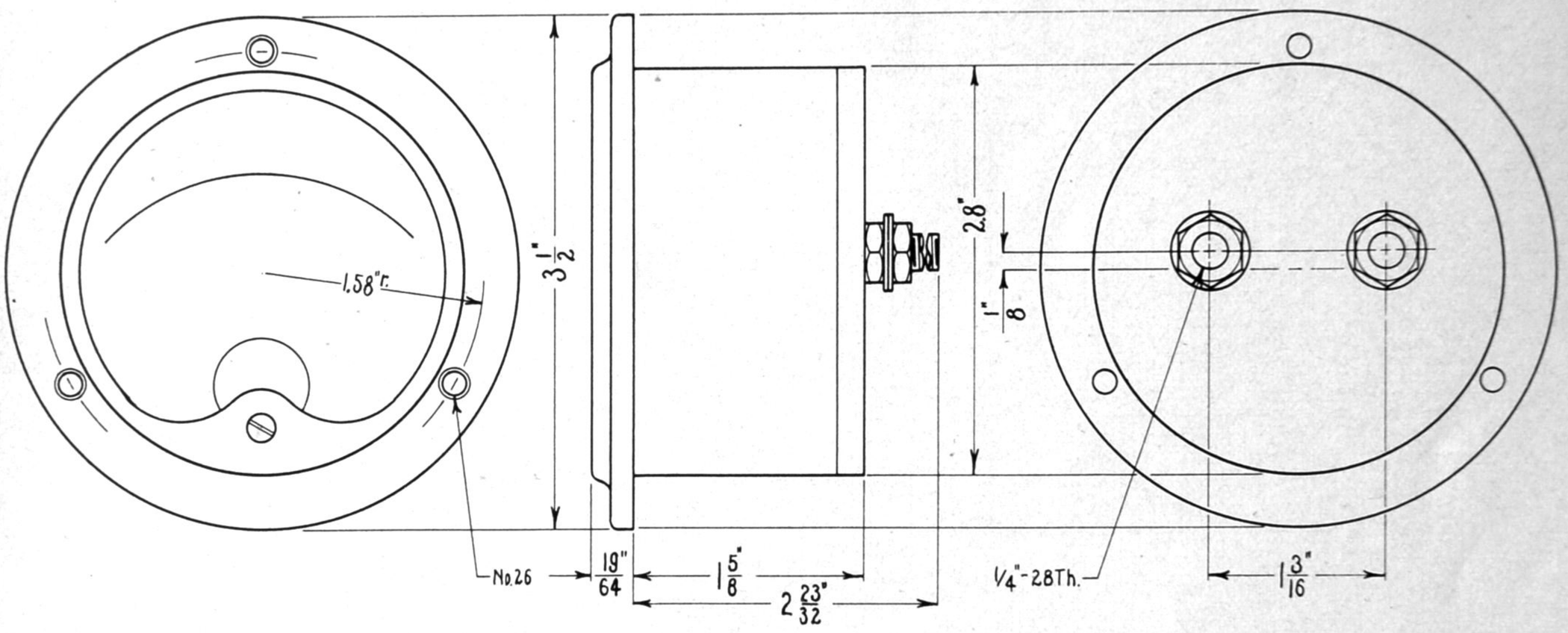

A.C. VOLTMETERS, AO Series
15 to 133 cycles

Volts	Ohms Resist.	Volts	Ohms Resist.
3	17.9	75	6,000
5	53.3	100	10,000
10	156	150	15,000
15	235	250	25,000
25	723	300	60,000
50	2,665	500	100,000

A.C. AMMETERS, AO Series
15 to 133 cycles

Amps.	Ohms Resist.	Amps.	Ohms Resist.
1	.138	10	.00125
2	.0372	15	.00094
3	.0128	20	.00048
*5	.00568	25	.00048
5	.00568	30	.00031
8	.00320	50	

* Transformer rated

A.C. MILLIAMMETERS, AO Series
15 to 133 cycles

Milliamps.	Ohms	Milliamps.	Ohms
10	1060	100	8.5
15	460	150	3.5
20	207	200	2.1
30	138	300	1.1
50	33	500	.43
75	17.5	750	.18

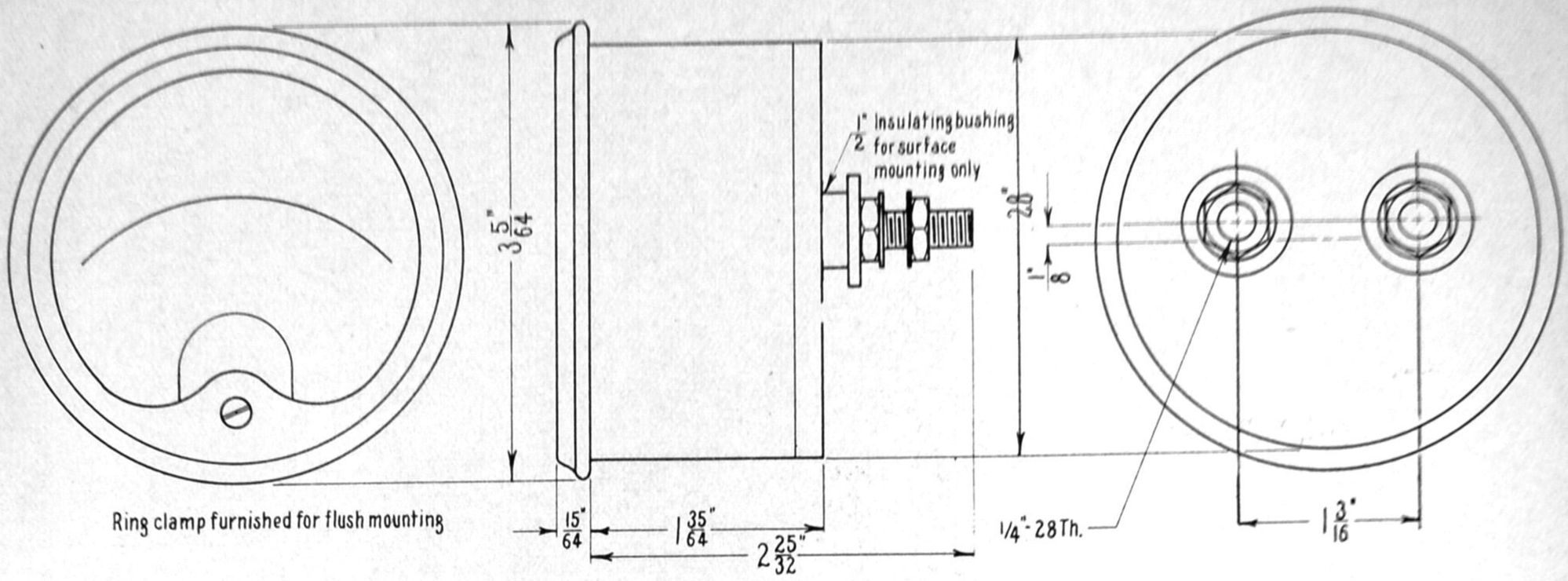

12-A-7 NARROW-FLANGE A.C. AND D.C. METERS
GENERAL ELECTRIC CO., Schenectady, N. Y.

No. DO series are made with molded composition cases. The narrow-flange type, above, can be used for flush or surface mounting. A ring clamp is provided for flush mounting. These instruments have permanent magnets and moving coils. The scale length is 2.64 ins. They are accurate within 2%, except the rectifier types which are rated ± 5%.

12-A-8 WIDE-FLANGE A.C. AND D.C. METERS
GENERAL ELECTRIC CO., Schenectady, N. Y.

The wide-flange models in the DO series, shown below, differ from the narrow-flange models only in the case dimensions.

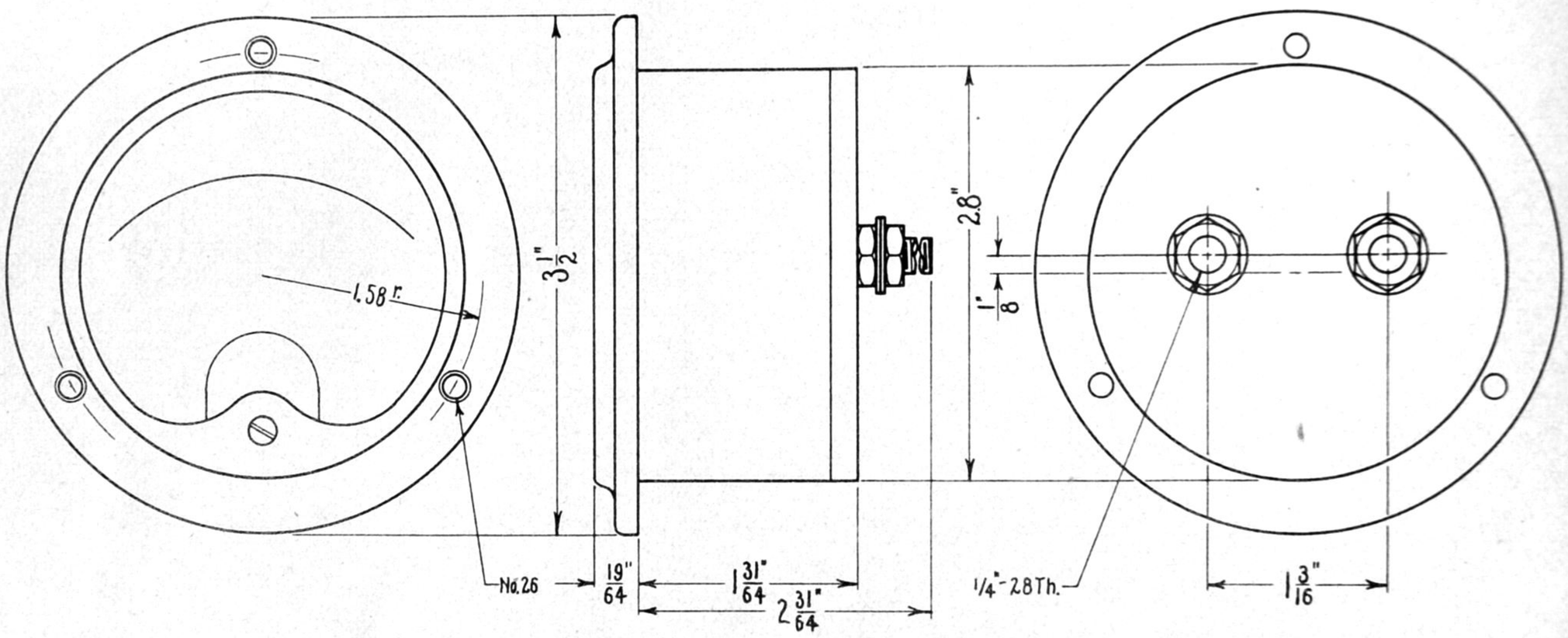

D.C. VOLTMETERS, DO Series
External resistor over 500 volts

Volts	O. per V.	Volts	O. per V.
1	100	50	1,000
1	1,000	75	100
1.5	100	75	1,000
1.5	1,000	100	100
2	100	100	1,000
2	1,000	150	200
3	100	150	1,000
3	1,000	200	200
5	100	200	1,000
5	1,000	250	400
8	100	250	1,000
8	1,000	300	1,000
10	100	500	1,000
10	1,000	750	1,000
15	100	1,000	1,000
15	1,000	1,500	100
20	100	2,000	100
25	100	2,500	100
25	1,000	3,000	100
30	100	5,000	100
50	100		

D.C. AMMETERS, DO Series
External shunts over 50 amperes

Amps.	Ohms Resist.	Amps.	Amps.
1	.050	30	600
1.5	.033	40	750
2	.025	50	800
3	.0167	100	1,000
5	.010	150	1,200
8	.00625	200	1,500
10	.005	300	2,000
15	.0033	400	2,500
20	.0025	500	3,000

D.C. MILLIAMMETERS, DO Series

Milliamps.	Ohms	Milliamps.	Ohms
1	70	30	3.3
1.5	45	50	2.0
2	30	100	1.0
3	12	150	.67
5	7	200	.50
10	4	300	.33
15	7	500	.20
20	5	800	.125

D.C. MICROAMMETERS, DO Series

Microamps.	Ohms	Microamps.	Ohms
20	2,000	200	360
30	2,000	300	360
50	2,000	500	250
75	2,000	750	180
100	1,600		

THERMO-COUPLE AMMETERS, DO

Amps.	Ohms Resist.	Amps.	Ohms Resist.
1	.29	6	.028
1.5	.17	8	.024
2	.11	10	.017
3	.075	15	.013
5	.045	20	.012

THERMO-COUPLE MILLIAMMETERS, DO

Milliamps.	Ohms	Milliamps.	Ohms
100	6.8	300	1.4
150	6.1	400	1.0
200	4.0	500	.62
250	2.0	750	.52

RECTIFIER MILLIAMMETERS, DO

Milliamps.	Ohms Resist.
1	600
2	500
5	300
10	200

RECTIFIER MICROAMMETERS, DO

Microamps.	Ohms Resist.
100	5,000
200	3,000
250	2,500
500	1,200

RECTIFIER VOLTMETERS, DO SERIES

Volts	Ohms Resist.	Volts	Ohms Resist.
1	2,000	15	15,000
1.5	3,000	50	50,000
3	6,000	100	100,000
5	10,000	150	150,000
10	10,000	300	300,000

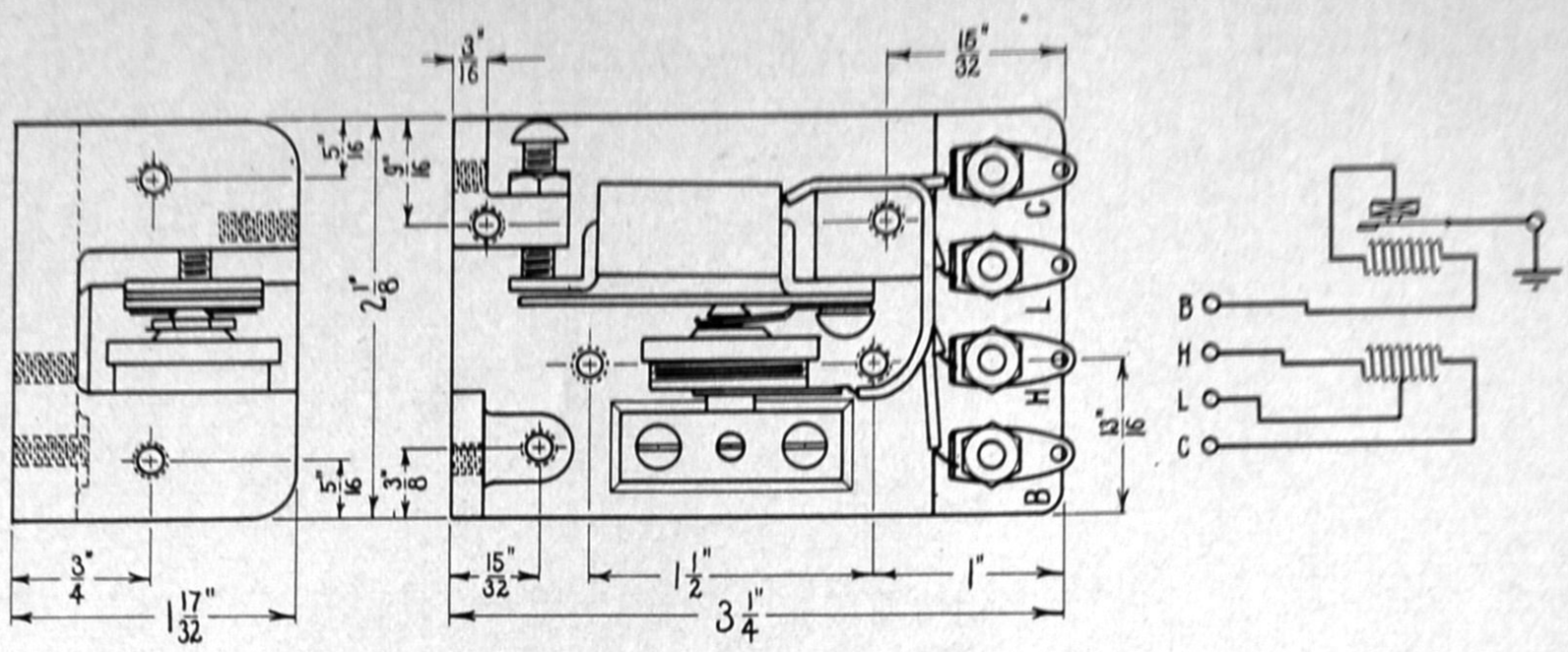

13-A-1 MICROPHONE HUMMER

GENERAL RADIO CO., Cambridge, Mass.

No. 572-B microphone hummer produces a tone of 1,000 cycles, ±10%. It is used as a low-power A.C. source where purity of wave form and frequency stability are not essential. A 4½-volt battery, such as the BURGESS No. 2370, is connected between the B terminal and the ground terminal on the cast aluminum frame The impedance from C to L is 10 ohms, and from C to H, 300 ohms. The output is 20 milliwatts maximum. This unit can be mounted at the end or on its base.

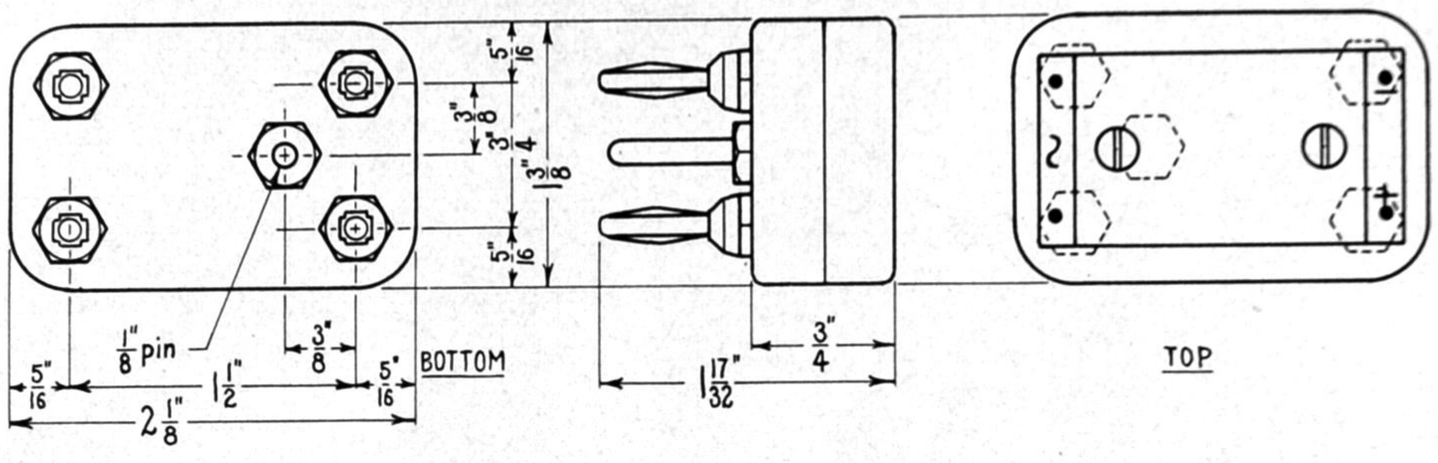

13-B-1 OXIDE RECTIFIER

GENERAL RADIO CO., Cambridge, Mass.

No. 492-A oxide rectifier contains four units, in a bridge circuit, to provide full-wave rectification. Used to measure A.C. voltages with D.C. instruments, or to operate D.C. relays, the impressed A.C. should not exceed 3 volts, nor should the output current exceed 15 milliamperes. This rectifier can be used on frequencies up to 5,000 cycles without appreciable error.

Maximum sensitivity is obtained with a load of 5,000 to 7,000 ohms. This load is recommended for relay operation. When a 1-milliampere meter of 400 or 500 ohms is used, full-scale deflection will be obtained at about 2 volts input. A base, with jacks and binding posts, is available for this unit, or it can be plugged into jacks on the device with which it is to be used.

13-C-1 THERMO-COUPLES

GENERAL RADIO CO., Cambridge, Mass.

No. 493 thermo-couples, mounted in exactly the same type of case as is illustrated at 13-B-1, are available in contact or heater types, The characteristics of the two types are similar, the contact type being slightly less expensive. The heater type is preferred for high-frequency use. Both types are contained in evacuated glass bulbs. The actual resistance of each couple, 10 to 12 ohms, is engraved on the nameplate.

Thermal sensitivity is 26 microvolts per degree F. All heaters will stand a continuous overload of 50% of the current shown in the table opposite.

CONTACT-TYPE COUPLES

No.	Heater Ohms	Milliamps. for 10 Millivolts open circuit
493-A	.05	275
493-C	2.	100
493-E	10	25
493-H	100	8
493-K	450	4.5

SEPARATE-HEATER COUPLES

493-HA	.05	275
493-HC	2.	100
493-HE	10	25
493-HH	100	8
493-HK	450	4.5

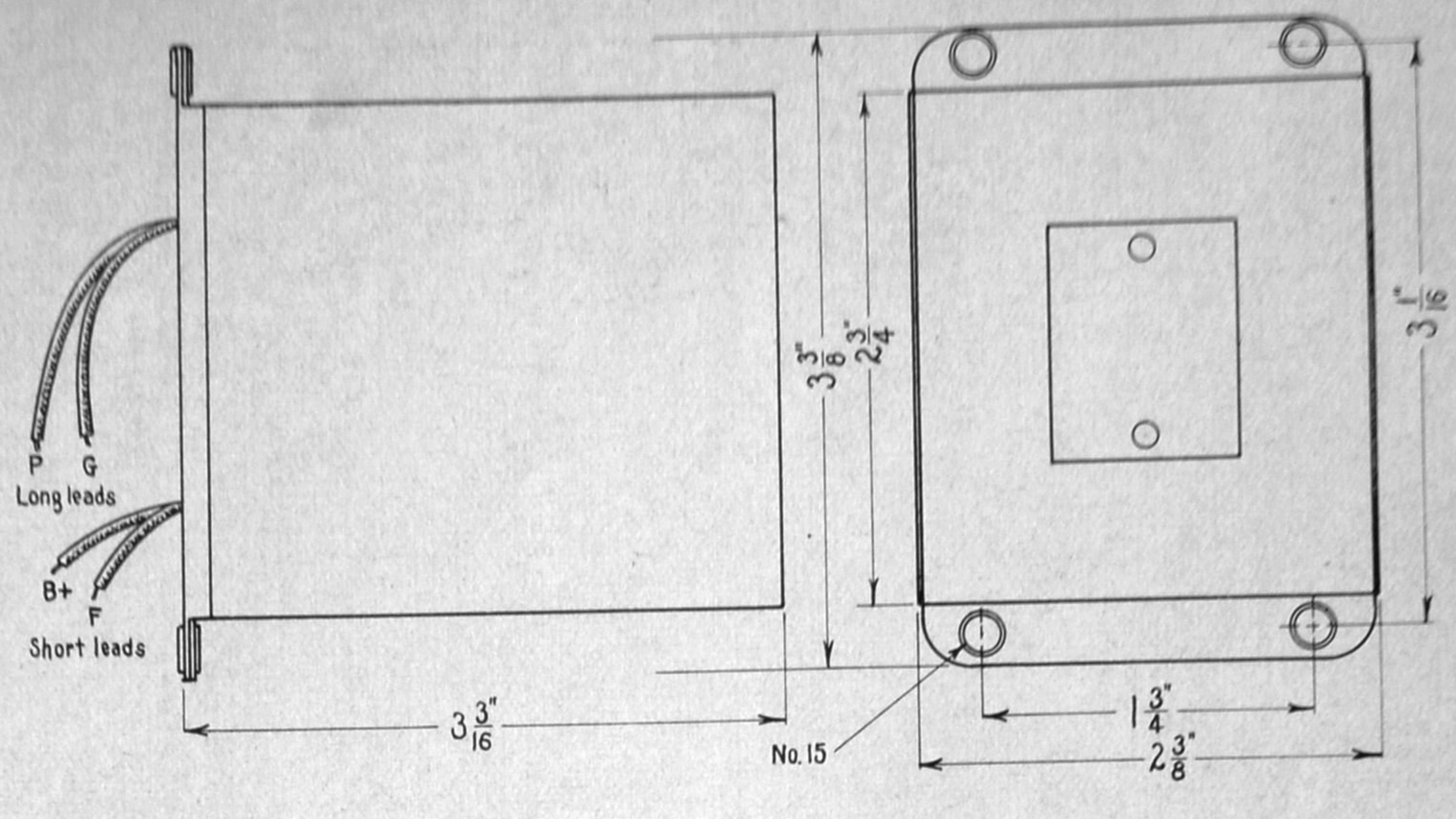

14-A-1 SCREEN GRID DETECTOR COUPLING
NATIONAL COMPANY, Malden, Mass.

No. S-101 impedance coupling unit, connected between a screen-grid detector and the first A.F. stage, gives two to three times as much amplification as resistance coupling. The plate choke is rated at 700 henries. The metal case also contains a coupling condenser of .01 mf., and a grid leak of .25 megohms. Connections are made to flexible leads brought out from the bottom of the case.

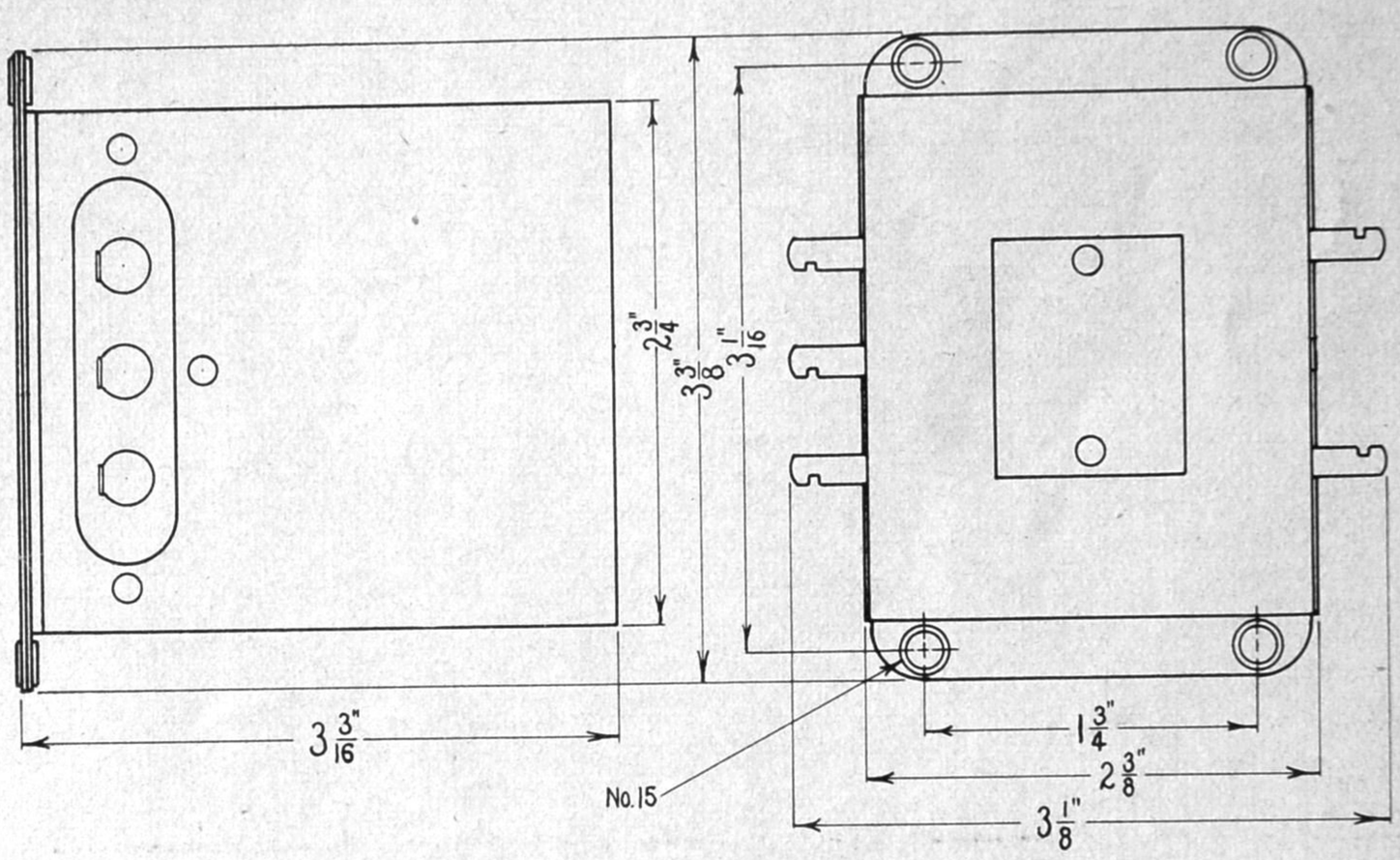

14-B-1 A.F. INPUT OR INTERSTAGE TRANSFORMER
NATIONAL COMPANY, Malden, Mass.

No. P-50 is a high-quality input or interstage A.F. transformer, with a turns ratio of 4 to 1. The secondary has a center tap. Special windings and a core of nickel-steel alloy are used to provide excellent characteristics for speech amplification. The transformer is mounted in steel case. This is a transformer used in the various NATIONAL radio receiving sets.

14-C-1 PUSH-PULL OUTPUT TRANSFORMER
NATIONAL COMPANY, Malden, Mass.

No. P-10 is a transformer for coupling push-pull output tubes to a loudspeaker. The transformer is contained in a steel case having the same dimensions as that illustrated at 14-B-1. The turns ratio is 5 to 3. Terminals are as arranged in 14-B-1.

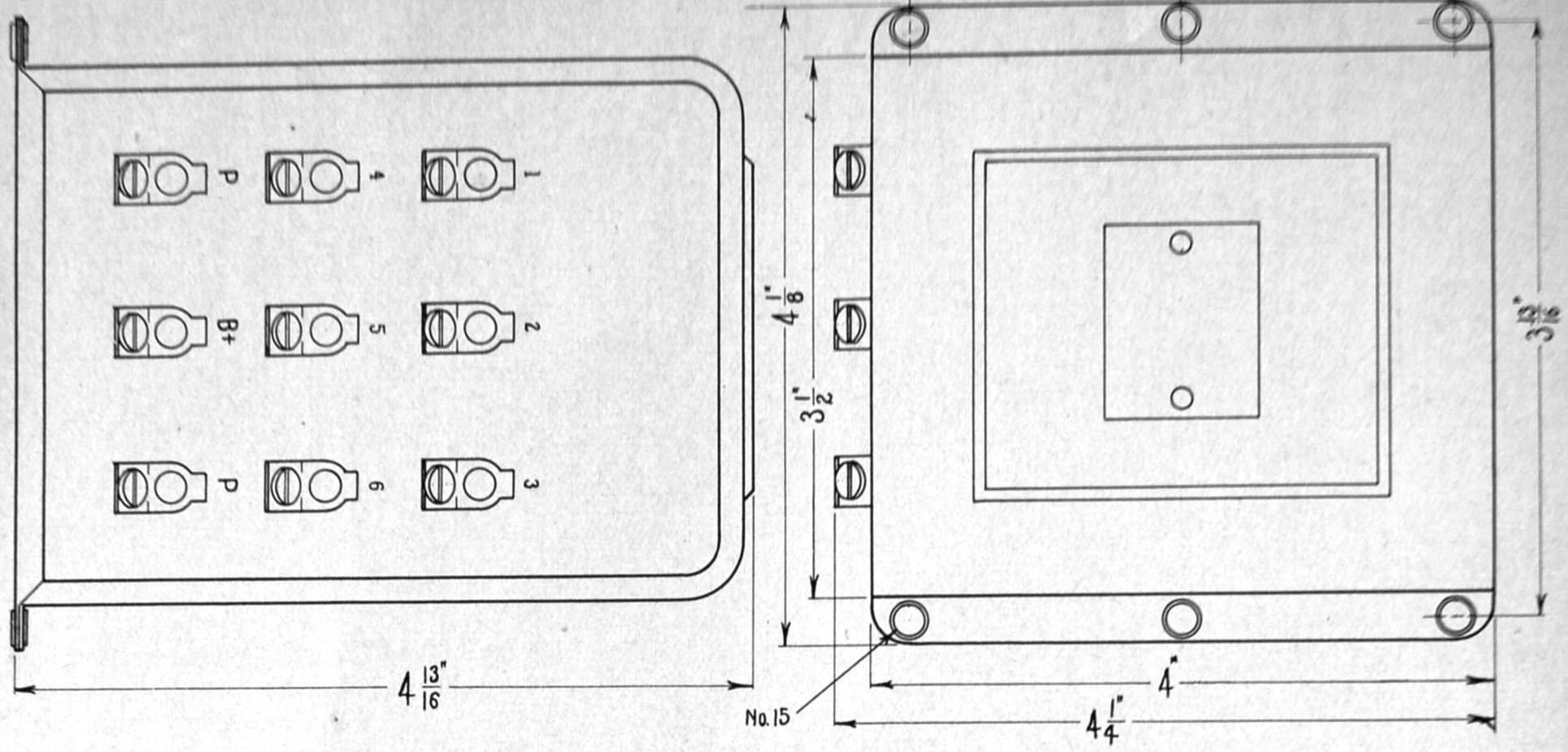

14-D-1 CLASS B INPUT TRANSFORMER
NATIONAL COMPANY, Malden, Mass.

No. BI input transformer is designed to couple two 45 tubes in push-pull to a pair of 210 or 46 tubes working Class B. The primary inductance is 20 henries, and the total primary resistance, 150 ohms. The total secondary resistance is 200 ohms. This transformer is designed for excellent audio characteristics. It is contained in a steel case with a Bakelite terminal plate.

14-D-2 CLASS B OUTPUT TRANSFORMER
NATIONAL COMPANY, Malden, Mass.

No. BO output transformer is designed to couple a Class B amplifier using 210's or 46's to various load impedances. The secondary is not designed to carry R.F. amplifier plate current. Insulation is for 5,000 volts. The primary inductance is 20 henries, and the total primary resistance, 115 ohms. The steel case is illustrated above. Terminals are mounted on a Bakelite plate.

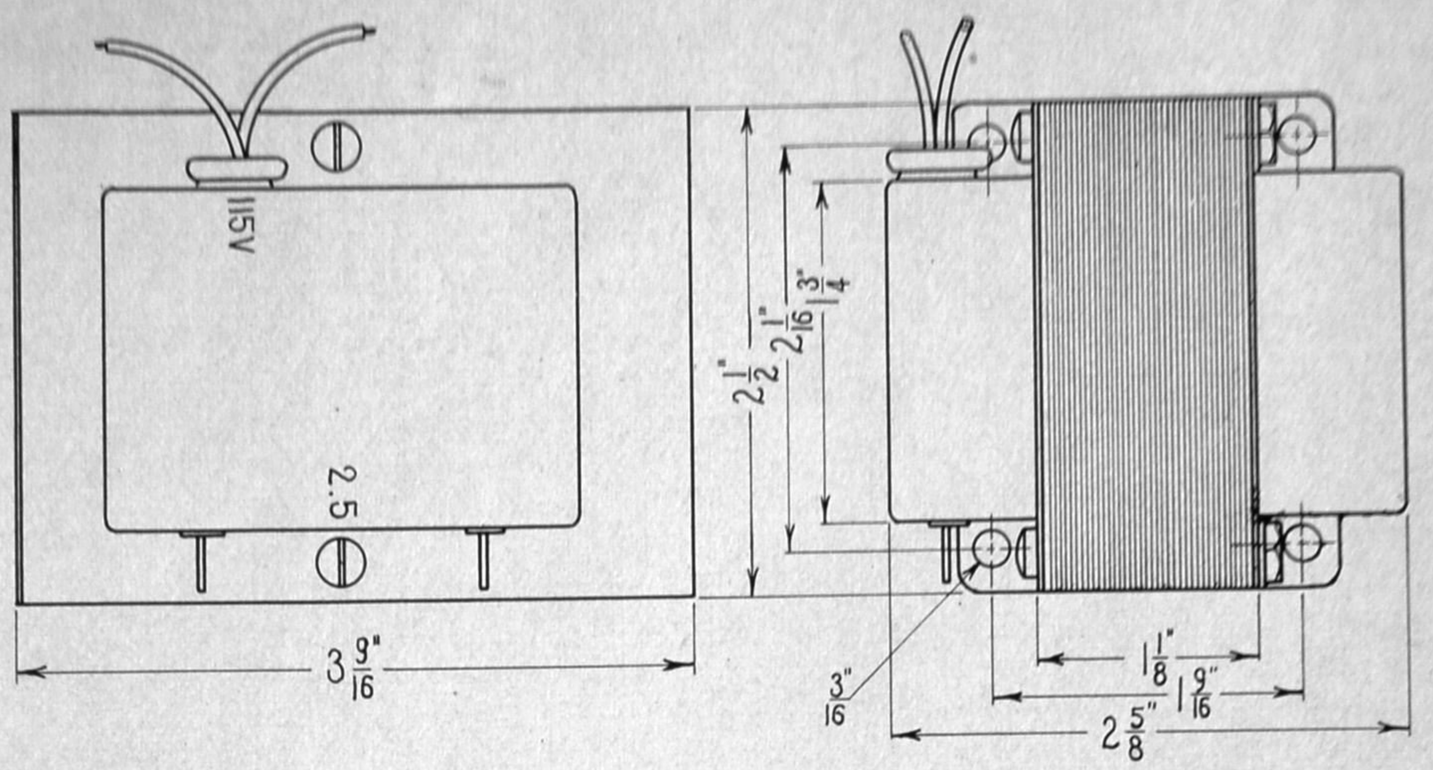

14-E-1 2½-VOLT FILAMENT TRANSFORMER

NATIONAL COMPANY, Malden, Mass.

No. CFL is a filament transformer, operating on 115 volts, 50–60 cycles, for 2½-volt tubes. Ample copper and iron give excellent regulation up to the maximum current of 10 amperes. The windings are protected by steel shells. Flexible leads are provided on the primary, with heavy copper wires for secondary terminals, to which the wiring can be soldered.

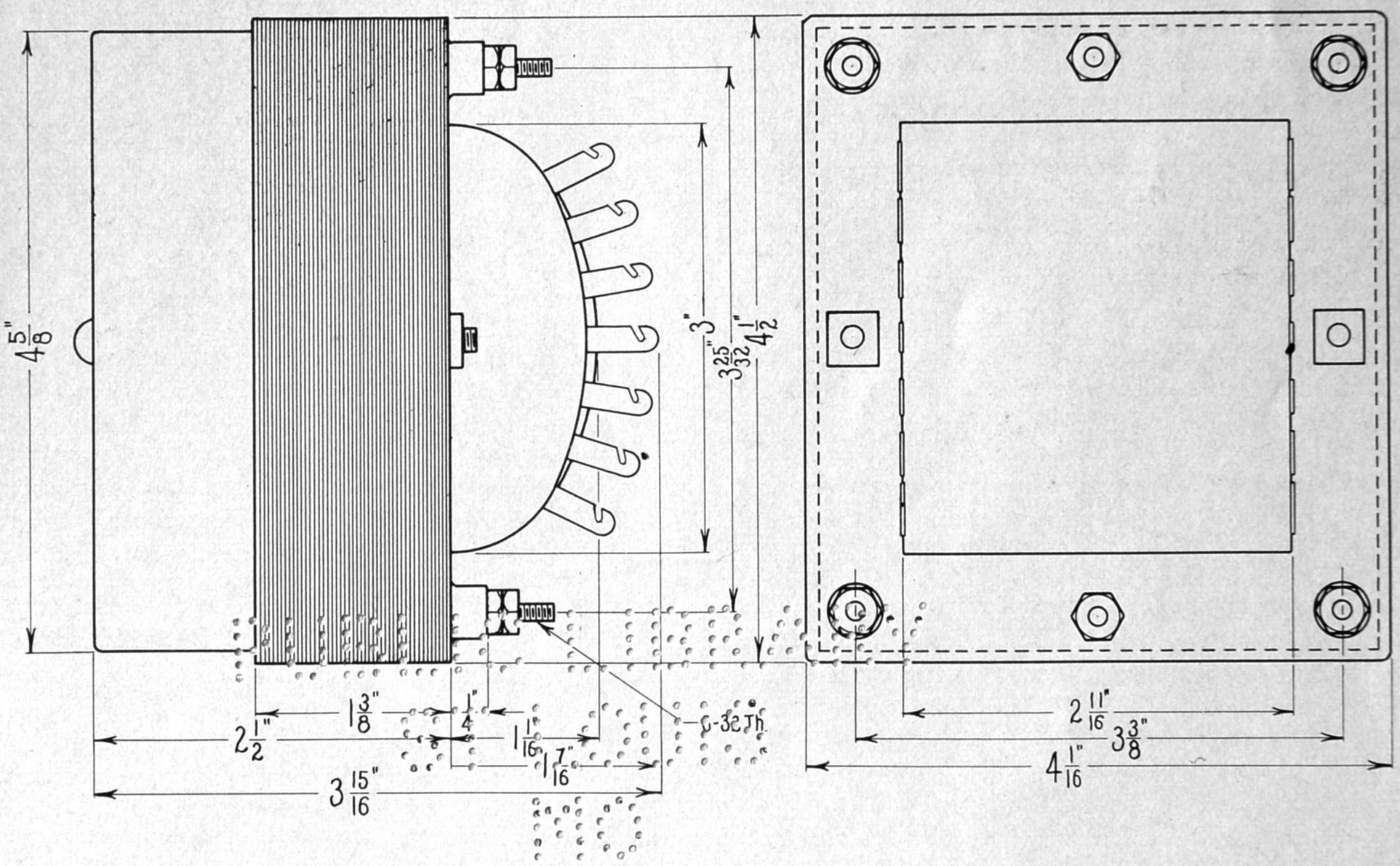

14-E-2 100-WATT POWER TRANSFORMER

NATIONAL COMPANY, Malden, Mass.

No. VSA is a general-purpose transformer conservatively rated at 100 watts and designed for 115 volts, 50–60 cycles. The windings are:

Center-tapped, high-voltage winding, 400 volts each side, 125 ma.

Center-tapped heater winding, 2½ volts, 10 amps.

Center-tapped 245 or 247 winding, 2½ volts, 3 amps.

Rectifier filament winding, 5 volts, 2 amps.

This transformer is designed to mount above the chassis, over a rectangular opening thru which the windings and terminals extend. The other side of the transformer has a steel cover.

14-F-1

INPUT TRANSFORMER
DELTA MFG. COMPANY, Waltham, Mass.

No. AD-90 is a Class A input transformer for coupling a single or double button microphone, phonograph pick-up, or 500-ohm line to grid. Mounted in a steel case, with terminals on the top. Net weight 2¾ lbs.

14-F-2

INPUT TRANSFORMER
DELTA MFG. COMPANY, Waltham, Mass.

No. AD-91 is a Class A interstage transformer for coupling a single tube or push-pull tubes of 10,000 to 50,000 ohms plate impedance, to grid. Mounted in a steel case, with terminals on the top. Net weight 2½ lbs.

14-G-1

CLASS B DRIVER
DELTA MFG. COMPANY, Waltham, Mass.

No. AD-70 is a Class B driver, used to couple two 2A3's or 50's in Class A, or two 59's or 46's in Class B, to Class B grids. Fitted with ventilated steel shells and side terminals. Net weight 5 lbs.

14-G-2

CLASS B OUTPUT
DELTA MFG. COMPANY, Waltham, Mass.

No. AD-71 is a Class B output transformer, used to couple two '03A tubes to Class C R.F. of 2,500 to 10,000 ohms. Open type mounting, with side terminal board. Net weight 27 lbs.

14-G-3

CLASS B DRIVER
DELTA MFG. COMPANY, Waltham, Mass.

No. AD-72 is a Class B driver to couple a 46, 45, or 59 Class A to the grids of two 46's or 59's in Class B. Mounted in a steel case with terminals on the top. Net weight 2½ lbs.

14-G-4

CLASS B OUTPUT
DELTA MFG. COMPANY, Waltham, Mass.

No. AD-74 is a Class B output transformer used to couple two 46's or 59's in Class B to Class C R.F. of 4,000 to 16,000 ohms. Fitted with ventilated steel shells and side terminals. Net weight 11 lbs.

14-G-5

CLASS B DRIVER
DELTA MFG. COMPANY, Waltham, Mass.

No. AD-75 is a Class B driver for coupling two 45's or 2A3's in Class A push-pull to the grids of two RK 18's in Class B. Mounted in a steel case, with terminals on the top. Net weight 2½ lbs.

14-G-6

CLASS B OUTPUT
DELTA MFG. COMPANY, Waltham, Mass.

No. AD-76 is a Class B output transformer for coupling two RK 18's or 800's in Class B to Class C R.F. of 5,000, 5,700, or 6,250 ohms. Fitted with ventilated steel shells and side terminals. Net weight 15½ lbs.

14-G-7

CLASS B DRIVER
DELTA MFG. COMPANY, Waltham, Mass.

No. AD-77 is a Class B driver for coupling two 2A3's in Class A push-pull to two 800's in Class B. Mounted in a steel case, with terminals on the top. Net weight 2¾ lbs.

14-G-8

CLASS B DRIVER
DELTA MFG. COMPANY, Waltham, Mass.

No. AD-78 is a Class B driver for coupling two 2A3's in Class A push-pull to two 830 B's in Class B. Mounted in a steel case, with terminals on the top. Net weight 2¾ lbs.

14-G-9

CLASS B OUTPUT
DELTA MFG. COMPANY, Waltham, Mass.

No. AD-79 is a Class B output transformer for coupling two 830 B's to Class C R.F. of 2,630 or 10,500 ohms. The secondary will carry Class C plate current. Open-type mounting, with terminal board on the side. Net weight 27 lbs.

14-H-1

FILAMENT TRANSFORMER
DELTA MFG. COMPANY, Waltham, Mass.

No. AD-10 is a filament transformer for 82, 27, 45, 46, 47, and 2A3 tubes. Three center-tapped secondaries, insulated for 2,500 volts, give 2½ volts at 3, 3.5, and 3.5 amps. Fitted with ventilated steel shells and side terminals. Net weight 3¾ lbs.

14-H-2

FILAMENT TRANSFORMER
DELTA MFG. COMPANY, Waltham, Mass.

No. AD-11 is a filament transformer for 66, '10, 41, 42, 50, 65, 81, and RK-18 tubes. One center-tapped secondary, insulated for 3,500 volts, gives 2.5 volts at 10 amps.; and two center-tapped secondaries, insulated for 2,500 volts, each give 7.5 volts at 2.5 amps. Fitted with ventilated steel shells and side terminals. Net weight 5½ lbs.

14-H-3

FILAMENT TRANSFORMER
DELTA MFG. COMPANY, Waltham, Mass.

No. AD-12 is a filament transformer for 66, 03A, 11, 17C, 52, and 60 tubes. One center-tapped secondary, insulated for 7,500 volts, gives 2.5 volts at 10 amps.; and two center-tapped secondaries, insulated for 2,500 volts, each give 10 volts at 3.25 amps. Fitted with ventilated steel shells and side terminals. Net weight 8½ lbs.

14-H-4

FILAMENT TRANSFORMER
DELTA MFG. COMPANY, Waltham, Mass.

No. AD-13 is a filament transformer for three 04A's or WESTERN ELECTRIC tubes. The center-tapped secondary, insulated for 2,500 volts, gives 10, 11, or 14 volts at 12.5 amps. It is fitted with ventilated steel shells and side terminals. Net weight 10 lbs.

14-H-5

FILAMENT TRANSFORMER
DELTA MFG. COMPANY, Waltham, Mass.

No. AD-14 is a filament transformer for Federal F 100A tubes. The center-tapped secondary, insulated for 2,500 volts, gives 10, 11, or 14 volts at 25 amps. It is fitted with ventilated steel shells and side terminals. Net weight 16 lbs.

14-H-6

FILAMENT TRANSFORMER
DELTA MFG. COMPANY, Waltham, Mass.

No. AD-15 is a filament transformer for two 66 or similar tubes. The center-tapped secondary, insulated for 4,000 volts, gives 2.5 volts at 10 amps. It is fitted with ventilated steel shells and side terminals. Net weight 3¾ lbs.

14-H-7

FILAMENT TRANSFORMER
DELTA MFG. COMPANY, Waltham, Mass.

No. AD-16 is a filament transformer for two 72 tubes. The center-tapped secondary, insulated for 7,500 volts, gives 5 volts at 20 amps. It is fitted with ventilated steel shells and side terminals. Net weight 8¼ lbs.

14-H-8

FILAMENT TRANSFORMER
DELTA MFG. COMPANY, Waltham, Mass.

No. AD-17 is a filament transformer for an 82 or 83 tube. The center-tapped secondary, insulated for 2,500 volts, gives 5 or 2.5 volts at 3 amps. It is fitted with ventilated steel shells and side terminals. Net weight 2¾ lbs.

14-H-9

FILAMENT TRANSFORMER
DELTA MFG. COMPANY, Waltham, Mass.

No. AD-18 is a filament transformer for 83, 27, 45, 46, and 47 tubes. One center-tapped secondary, insulated for 2,500 volts, gives 5 volts at 3 amps.; two center-tapped secondaries, insulated for 2,500 volts, each give 2.5 volts at 3.5 amps. Fitted with ventilated steel shells and side terminals. Net weight 4 lbs.

14-H-10

FILAMENT TRANSFORMER
DELTA MFG. COMPANY, Waltham, Mass.

No. AD-19 is a filament transformer for three 83 tubes. Three secondaries, insulated for 3,500 volts, each give 5 volts at 3 amps. It is fitted with ventilated steel shells and side terminals. Net weight 4½ lbs.

14-H-11

FILAMENT TRANSFORMER
DELTA MFG. COMPANY, Waltham, Mass.

No. AD-1011 is a filament transformer for two 66 tubes. The center-tapped secondary, insulated for 13,000 volts, gives 2.5 volts at 10 amps. Open-type mounting, with side terminal plate. Net weight 4 lbs.

14-H-12

FILAMENT TRANSFORMER
DELTA MFG. COMPANY, Waltham, Mass.

No. AD-1012 is a filament transformer for '10, RK18, 800, and 825 tubes. The center-tapped secondary, insulated for 5,000 volts, gives 7.5 volts at 6.5 amps. Fitted with ventilated steel shells and side terminals. Net weight 5 lbs.

14-H-13

FILAMENT TRANSFORMER
DELTA MFG. COMPANY, Waltham, Mass.

No. AD-1013 is a filament transformer for '10, RK 18, 800, and 825 tubes. The center-tapped secondary, insulated for 5,000 volts, gives 7.5 volts at 13 amps. Fitted with ventilated steel shells and side terminals. Net weight 8¼ lbs.

14-H-14

FILAMENT TRANSFORMER
DELTA MFG. COMPANY, Waltham, Mass.

No. AD-1014 is a filament transformer for the 66 bridge circuit. Two center-tapped secondaries, insulated for 13,000 volts, each give 2.5 volts at 5 amps. Open-type mounting, with side terminal plate. Net weight 4 lbs.

NOTE—

The inductance of the following swinging chokes "swings" up to a maximum value at least 5 times the minimum which is established by the load voltage and current. This is essential for Class B modulation.

14-I-1

SWINGING CHOKE
DELTA MFG. COMPANY, Waltham, Mass.

No. AD-30 is a swinging choke of 5-25 henries, with a resistance of 135 ohms, insulated for 2,500 volts. The maximum D.C. rating is 400 volts at .175 amp. The minimum input condenser capacity is 3 mf. It is fitted with ventilated steel shells and side terminals. Net weight 6 lbs.

14-I-2

SWINGING CHOKE
DELTA MFG. COMPANY, Waltham, Mass.

No. AD-31 is a swinging choke of 8–40 henries, with a resistance of 110 ohms, insulated for 2,500 volts. The maximum D.C. rating is 750 volts at .20 amps. The minimum input condenser capacity is 2 mf. It is fitted with ventilated steel shells and side terminals. Net weight 11 lbs.

14-I-3

SWINGING CHOKE
DELTA MFG. COMPANY, Waltham, Mass.

No. AD-32 is a swinging choke with two coils insulated for 6,000 volts. When they are connected in parallel, the inductance is 5–25 henries, with a resistance of 70 ohms. The D.C. rating is .5 amp. at 1,250 volts, and the minimum input condenser capacity 3. mf.

When the coils are connected in series, the inductance is 20–100 henries, with a resistance of 275 ohms. The D.C. rating is .25 amp. at 2,500 volts, and the minimum input condenser capacity 1. mf.

This choke has the open-type mounting, with a terminal plate on the side. Net weight 17¾ lbs.

14-I-4

SWINGING CHOKE
DELTA MFG. COMPANY, Waltham, Mass.

No. AD-33 is a swinging choke of 8–40 henries, with a resistance of 120 ohms, insulated for 3,500 volts. The maximum D.C. rating is .275 amp. at 1,000 volts. The minimum input condenser capacity is 2 mf. It is fitted with ventilated steel shells and side terminals. Net weight 12¼ lbs.

14-I-5

SWINGING CHOKE
DELTA MFG. COMPANY, Waltham, Mass.

No. AD-35 is a swinging choke of 5–25 henries, with a resistance of 50 ohms, insulated for 3,500 volts. The maximum D.C. rating is .4 amp. at 1,250 volts. The minimum input condenser capacity is 3 mf. It is fitted with ventilated steel shells and side terminals. Net weight 16 lbs.

14-J-1

SMOOTHING CHOKE
DELTA MFG. COMPANY, Waltham, Mass.

No. AD-40 is a smoothing choke of 8.5 henries, with a resistance of 135 ohms, insulated for 2,500 volts. The maximum D.C. current is .175 amp., and the energy storage, .13 watt-second. It is fitted with steel shells and side terminals. Net weight 6½ lbs.

14-J-2

SMOOTHING CHOKE
DELTA MFG. COMPANY, Waltham, Mass.

No. AD-41 is a smoothing choke of 10 henries, with a resistance of 110 ohms, insulated for 2,500 volts. The maximum D.C. current is .2 amp., and the energy storage, .20 watt-second. It is fitted with ventilated steel shells and side terminals. Net weight 11¼ lbs.

14-J-3

SMOOTHING CHOKE
DELTA MFG. COMPANY, Waltham, Mass.

No. AD-42 is a smoothing choke with two coils, insulated for 6,000 volts. When they are connected in parallel, the inductance is 8 henries, with a resistance of 70 ohms and energy storage 1. watt-second. Maximum D.C. current is .5 amp.

When the coils are connected in series, the inductance is 30 henries, with a resistance of 270 ohms and energy storage 1. watt-second. Maximum D.C. current is .25 amp.

This choke has the open-type mounting, with a terminal panel on the side. Net weight 17¾ lbs.

14-J-4

SMOOTHING CHOKE
DELTA MFG. COMPANY, Waltham, Mass.

No. AD-43 is a smoothing choke of 12 henries, with a resistance of 120 ohms, insulated for 3,500 volts. The maximum D.C. current is .275 amp., and the energy storage .45 watt-second. It is fitted with ventilated steel shells and side terminals. Net weight 10½ lbs.

14-J-5

SMOOTHING CHOKE
DELTA MFG. COMPANY, Waltham, Mass.

No. AD-44 is a smoothing choke of 10 henries, with a resistance of 197 ohms, insulated for 2,500 bolts. The maximum D.C. current is .11 amp., and the energy storage .06 watt-second. It is enclosed in a steel case, with terminals on the top. Net weight, 4 lbs.

14-J-6

SMOOTHING CHOKE
DELTA MFG. COMPANY, Waltham, Mass.

No. AD-46 is a smoothing choke of 8.5 henries, with a resistance of 50 ohms, insulated for 3,500 volts. The maximum D.C. current is .4 ampere, and the energy storage .68 watt-second. It is fitted with ventilated steel shells and side terminals. Net weight 16 lbs.

NOTE—

The plate transformers listed below are assembled with static shields between primaries and secondaries, to minimize the tunable hum, key-click interference, and R.F. radiation from the A.C. wiring. They will operate at full load continuously with a temperature rise not exceeding 50° C. They are designed to operate on 115 volts, 60 cycles, single phase.

14-K-1

PLATE TRANSFORMER
DELTA MFG. COMPANY, Waltham, Mass.

No. AD-20 is a plate transformer designed for .175 amp. and 400 volts D.C. from the filter, and has secondary taps for 525-0-525 volts at .13 R.M.S. amp. It is insulated for 2,500 volts. The transformer is fitted with ventilated steel shells and side terminals. Net weight 6¾ lbs.

14-K-2

PLATE TRANSFORMER
DELTA MFG. COMPANY, Waltham, Mass.

No. AD-21 is a plate transformer designed for .2 amp. and 500 or 750 volts D.C. from the filter, and has secondary taps for 900-600-0-600-900 volts at .15 R.M.S. amp. It is insulated for 4,000 volts. The transformer is fitted with ventilated steel shells and side terminals. Net weight 13½ lbs.

14-K-3

PLATE TRANSFORMER
DELTA MFG. COMPANY, Waltham, Mass.

No. AD-22 is a plate transformer with two sets of taps. The first is to give .5 amp. and 1,000 or 1,250 volts D.C. from the filter, with secondary taps for 1,500-1,250-0-1,250-1,500 volts at .38 R.M.S. amp.

The second set of taps is to give .25 amp. at 2,000 or 2,500 volts D.C. from the filter, and has secondary taps for 3,000-2,500-0-2,500-3,000 volts at .19 R.M.S. amp.

It is insulated for 13,000 volts. The transformer has the open-type mounting, with a side terminal plate. Net weight 39 lbs.

14-K-4

PLATE TRANSFORMER
DELTA MFG. COMPANY, Waltham, Mass.

No. AD-23 is a plate transformer for the DELTA bridge rectifier. Details of this circuit were given in QST for March, 1933. The transformer is designed to give a total current of .25 amp. at 1,000 and 500 volts D.C. from the filter, with secondary taps for 600-0-600 volts at .3 R.M.S. amp. It is insulated for 3,500 volts. The transformer is fitted with ventilated steel shells and side terminals. Net weight 16 lbs.

14-K-5

PLATE TRANSFORMER
DELTA MFG. COMPANY, Waltham, Mass.

No. AD-26 is a plate transformer designed for .4 amp. and 1,000 or 1,250 volts D.C. from the filter, and has secondary taps for 1,500-1,250-0-1,250-1,500 volts at .3 R.M.S. amp. It is insulated for 7,000 volts. The transformer has the open-type mounting, with a side terminal plate. Net weight 28 lbs.

14-L-1 INPUT TRANSFORMER
WESTERN ELECTRIC COMPANY, INC., New York City

No. 269-A input transformer, used in the WESTERN ELECTRIC 81-A and 82-A amplifiers, has an impedance ratio of 200:110,000 between windings 1–2, 3–4 and 5–6 and operates over a frequency range of 35 to 10,000 cycles. The D.C. resistance of windings 1–2 and 3–4 in series is approximately 30.8 ohms, while the D.C. resistance of winding 5–6 is approximately 4,850 ohms.

The closest recommended mounting centers are 2⅝ ins. and 3½ ins. Overall dimensions are approximately 3 13/32 ins. by 2 9/16 ins. by 3 7/16 ins. high, exclusive of the terminals. It works out of a 200-ohm impedance into a 262-A vacuum tube when used in the 81-A amplifier.

14-L-2 INPUT TRANSFORMER
WESTERN ELECTRIC COMPANY, INC., New York City

No. 270-C input transformer, used in the WESTERN ELECTRIC 82-A amplifier, has an impedance ratio of 15,000:145,000 between windings 1–2 and 3–4, 5–6 and operates over a frequency range of 35 to 10,000 cycles per second. The D.C. resistance of winding 1–2 is approximately 1,453 ohms, while the D.C. resistance of windings 3–4, 5–6 is approximately 4,624 ohms.

The closest recommended mounting centers are 1¾ ins. and 3½ ins. In the 82-A amplifier, it works out of a 262-A vacuum tube shunted by a resistance of 100,000 ohms and in series with a 1 mf. condenser into push-pull 271-A vacuum tubes. Overall dimensions are approximately 3 9/32 ins. by 1 11/16 ins. by 3 7/16 ins. high, exclusive of the terminals.

14-L-3 INPUT TRANSFORMER
WESTERN ELECTRIC COMPANY, INC., New York City

No. 270-E input transformer, used in the WESTERN ELECTRIC 700-A volume indicator, has an impedance ratio of 1,000:55,800 ohms and operates over the frequency range of 50 to 8,000 cycles per second. The average D.C. resistance of windings 1–2, 3–4 in series is 76 ohms. The average D.C. resistance of winding 5–6 is 3,900 ohms. Closest recommended mounting centers are 1¾ ins. by 3½ ins. Overall dimensions are approximately 1 11/16 ins. by 3 9/32 ins. by 3 7/16 ins. high, exclusive of the terminals.

When used in a 700-A volume indicator with the 15-A speech input equipment, it operates out of 1,000 ohms into a 262-A vacuum tube shunted by a potentiometer having a maximum resistance of 300,000 ohms and a minimum resistance of 200,000 ohms.

14-L-4 INPUT TRANSFORMER
WESTERN ELECTRIC COMPANY, INC., New York City

No. 247-M input transformer, used in the modulator stage of the WESTERN ELECTRIC 12-A radio transmitter, has an impedance ratio of 500 to 16,300 ohms between windings 1–2, 3–4 and 5–6, and is intended to operate over a frequency range of 35 to 10,000 cycles per second. The average D.C. resistance of windings 1–2, 3–4 in series is approximately 15 ohms; that of winding 5–6 is 1,880 ohms. Overall dimensions are approximately 2⅞ ins. by 2⅞ ins. by 3 31/32 ins.

Used in the modulator stage of the 12-A radio transmitter where it works from a 500-ohm impedance into the shunt path of a "conjugate input type" 212-D vacuum tube modulator.

14-L-5 INPUT TRANSFORMER
WESTERN ELECTRIC COMPANY, INC., New York City

No. 262-A input transformer is used in the WESTERN ELECTRIC 12-A radio transmitter where it serves to couple the quartz oscillator to the first buffer amplifier of the transmitter.

14-M-1 OUTPUT TRANSFORMER
WESTERN ELECTRIC COMPANY, INC., New York City

No. 139-B output transformer, used in the WESTERN ELECTRIC 81-A amplifier, has an impedance ratio of 15,300:330 between windings 5–6 and 1–2, 3–4 and operates over the frequency range of 35 to 10,000 cycles. The D.C. resistance of windings 1–2, 3–4 in series is approximately 29.7 ohms. The D.C. resistance of winding 5–6 is approximately 677 ohms. Closest recommended mounting centers are 1¾ ins. and 3½ ins. Overall dimensions are approximately 3 9/32 ins. by 1 11/16 ins. by 3 7/16 ins. high, exclusive of the terminals.

When used in the 81-A amplifier it works out of a 262-A vacuum tube, shunted by a resistance of 100,000 ohms and in series with a 1 mf. condenser, into a 500-ohm potentiometer.

14-M-2 OUTPUT TRANSFORMER
WESTERN ELECTRIC COMPANY, INC., New York City

No. 157-A output transformer, used in the WESTERN ELECTRIC 82-A amplifier, has an impedance ratio of 10,000:500 between windings 5–6, 7–8 and 1–4 and an impedance ratio of 10,000:250 between windings 5–6, 7–8 and 2–3. It operates over the frequency range of 35 to 10,000 cycles. The D.C. resistance of windings 5–6, 7–8 in series is approximately 1,067 ohms; the D.C. resistance of winding 1–4 is approximately 62.3 ohms; and the D.C. resistance of winding 2–3 is approximately 43.3 ohms. Closest recommended mounting centers are 1¾ ins. and 3½ ins. Overall dimensions are approximately 1 11/16 ins. by 3 9/32 ins. by 3 7/16 ins. high, exclusive of the terminals.

When used in the 82-A amplifier it works out of two 271-A vacuum tubes in push-pull and into either a 500- or 250-ohm impedance.

14-M-3 OUTPUT TRANSFORMER
WESTERN ELECTRIC COMPANY, INC., New York City

No. 162-A output transformer, used in the WESTERN ELECTRIC 700-A volume indicator, has an impedance ratio of 25,000:200 between windings 5–6 and 1–2, 3–4 and operates over the frequency range of 50 to 8,000 cycles per second. The average D.C. resistance of windings 1–2 and 3–4 in series is approximately 37 ohms, and the average D.C. resistance of winding 5–6 is approximately 2,535 ohms. Closest recommended mounting centers are 1¾ ins. by 3½ ins. Overall dimensions are approximately 1 11/16 ins. by 3 9/32 ins. by 3 7/16 ins. high, exclusive of the terminals.

It operates out of a 262-A vacuum tube into a 200-ohm impedance in the 700-A volume indicator.

14-N-1 REPEATING COIL
WESTERN ELECTRIC COMPANY, INC., New York City

No. 118-B repeating coil has an average D.C. resistance in winding 1–2 of approximately 127 ohms; that of winding 3–4 is approximately 1,300 ohms. Overall dimensions are approximately 2⅞ ins. by 2⅞ ins. by 4 ins. high.

Used in speech input equipments, it is designed to work with the high side bridged across a 500-ohm line and with the low side connected to the input of a 60-A amplifier. It has a turns ratio of 25.2:1 between windings 3–4 and 1–2 and operates over a frequency range of 30 to 10,000 cycles.

14-N-2 REPEATING COIL
WESTERN ELECTRIC COMPANY, INC., New York City

No. 119-C repeating coil has an impedance ratio of 1:1.15 between windings 4–3, 8–7 and 2–1, 6–5. It operates over a frequency range of 35 to 8,000 cycles. Overall dimensions approximately 4 3/16 ins. by 2 9/16 ins. by 4⅜ ins., exclusive of terminals.

It operates out of a 600-ohm line into a 600-ohm line connector network.

14-O-1 POWER TRANSFORMER
WESTERN ELECTRIC COMPANY, INC., New York City

No. 334-C power transformer, used in the WESTERN ELECTRIC 8-A rectifier, with 115 volts, 50–60 cycles, applied to winding 1–3 or 107.5 volts to winding 1–2 or 122.5 volts to winding 1–4, winding 5–7 delivers .088 amp. r.m.s. at approximately 1,290 volts, and winding 8–10 delivers 2 amps. at 5 volts. Terminals 6 and 9 are the center taps of windings 5–7 and 8–10, respectively.

The average D.C. resistances of the windings at 68° F. are as follows:

Winding	Ohms
1–4	2.65
5–7	385.0
8–10	0.073

Closest recommended mounting centers are $3\frac{1}{8}$ ins. by $3\frac{1}{2}$ ins. Overall dimensions are approximately $5\frac{1}{8}$ ins. by $4\frac{1}{8}$ ins. by $3\frac{3}{4}$ ins. and the weight is approximately $9\frac{1}{2}$ pounds.

It supplies power to one 274-A rectifier tube in the 8-A rectifier.